LOC RWY 27

LOUISA COUNTY/FREEMAN FLD (LKU)

LOC I-LKU	APP CRS	Rwy ldg	4300
108.55	272°	TDZE	494
		Apt Elev	494

DME required.

NA

Circling NA north of Rwy 9-27. When local altimeter setting not received, use Orange altimeter setting and increase all MDA 40 feet. VDP NA when using Orange altimeter setting.

MISSED APPROACH: Climb to 2900 direct GVE VORTAC and hold.

AWOS-3	POTOMAC APP CON		UNICOM
119.475	132.85	323.125	122.975 (CTAF) L

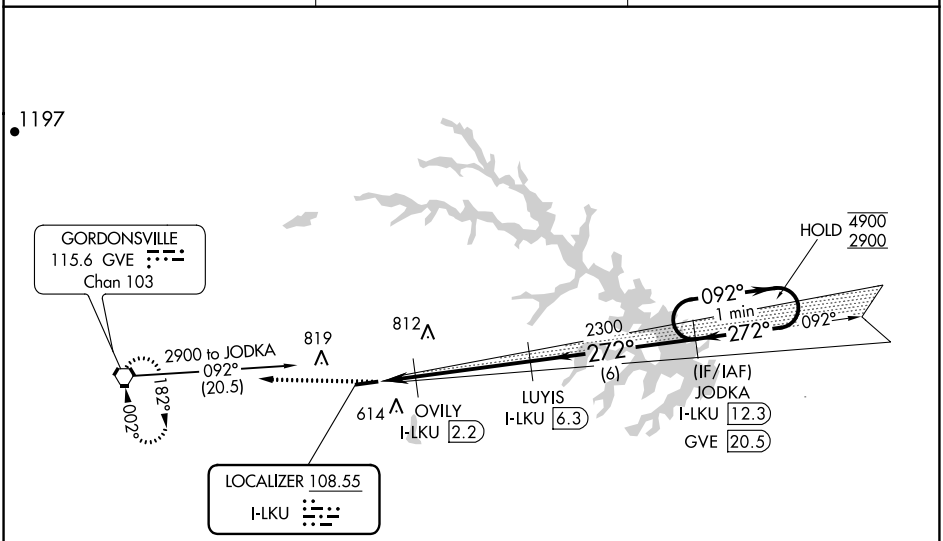

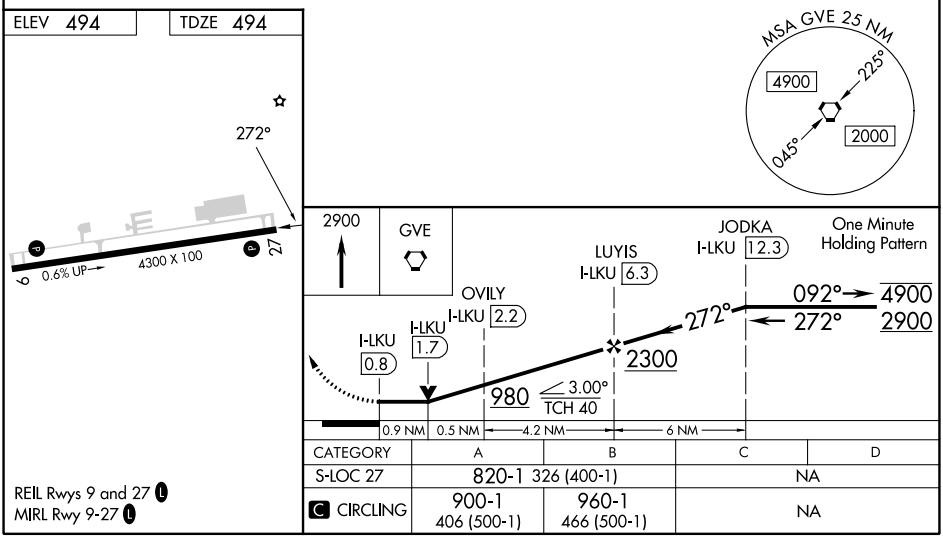

CATEGORY	A	B	C	D
S-LOC 27	820-1 326 (400-1)		NA	
C CIRCLING	900-1 406 (500-1)	960-1 466 (500-1)	NA	

REIL Rwys 9 and 27 L
MIRL Rwy 9-27 L

NE-3, 22 FEB 2024 to 21 MAR 2024

NE-3, 22 FEB 2024 to 21 MAR 2024

WAAS CH 58318 W27A	APP CRS 272°	Rwy ldg 4300 TDZE 494 Apt Elev 494

RNAV (GPS) RWY 27
LOUISA COUNTY/FREEMAN FLD (LKU)

RNP APCH.

Circling NA north of Rwy 9-27. Baro-VNAV NA when using Orange altimeter setting. For uncompensated Baro-VNAV systems, LNAV/VNAV NA below -15°C or above 54°C. When local altimeter setting not received, use Orange altimeter setting and increase all DA to 780 feet and all MDA 40 feet and increase LPV and LNAV/VNAV visibility ⅛ SM.

MISSED APPROACH: Climb to 1000 then climbing right turn to 2900 direct GVE VORTAC and hold, continue climb-in-hold to 2900.

AWOS-3	POTOMAC APP CON	UNICOM
119.475	132.85 323.125	122.975 (CTAF) L

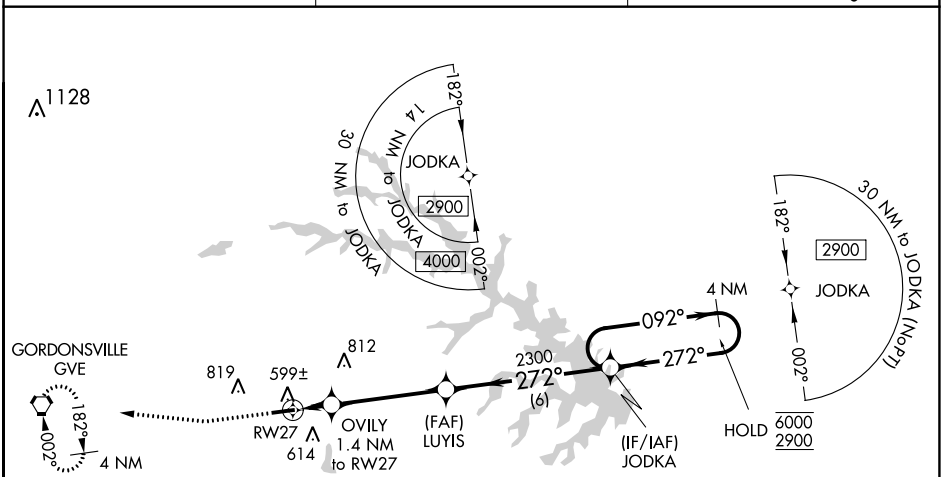

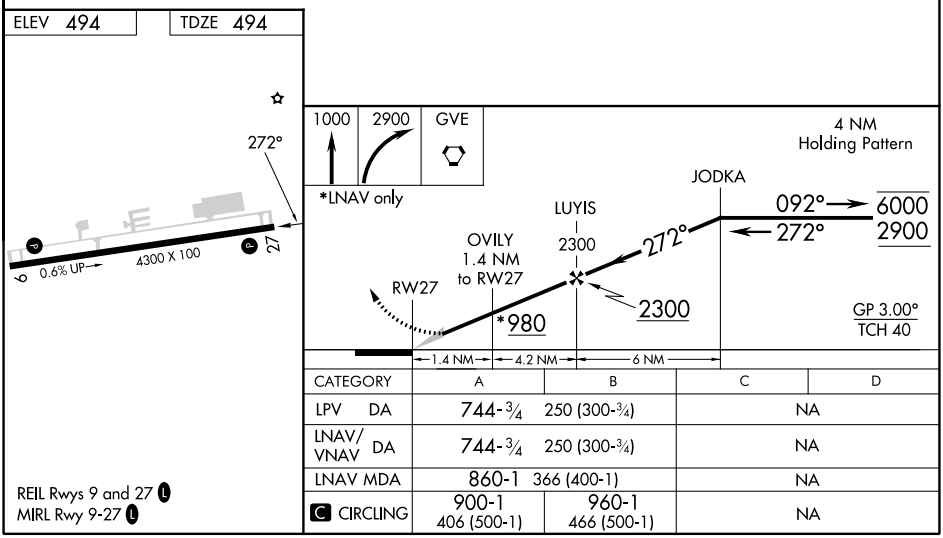

CATEGORY	A	B	C	D
LPV DA	744-¾	250 (300-¾)	NA	
LNAV/VNAV DA	744-¾	250 (300-¾)	NA	
LNAV MDA	860-1	366 (400-1)	NA	
C CIRCLING	900-1 406 (500-1)	960-1 466 (500-1)	NA	

REIL Rwys 9 and 27 L
MIRL Rwy 9-27 L

NE-3, 22 FEB 2024 to 21 MAR 2024

WAAS CH 48843 W09A	APP CRS 092°	Rwy ldg 4300 TDZE 489 Apt Elev 494

RNAV (GPS) RWY 9
LOUISA COUNTY/FREEMAN FLD (LKU)

RNP APCH.

Circling NA north of Rwy 9-27. Rwy 9 helicopter visibility reduction below ¾ SM NA. For uncompensated Baro-VNAV systems, LNAV/VNAV NA below -15°C or above 54° C. When local altimeter setting not received, use Orange altimeter setting and increase LPV DA to 775 feet, LNAV/VNAV DA to 784 feet and MDA 40 feet; increase LPV and LNAV/VNAV visibility ⅛ SM. Baro-VNAV and VDP NA when using Orange altimeter setting.

MISSED APPROACH: Climb to 1000 then climbing right turn to 3300 direct TURCO and hold.

AWOS-3	POTOMAC APP CON	UNICOM
119.475	132.85 323.125	122.975 (CTAF) L

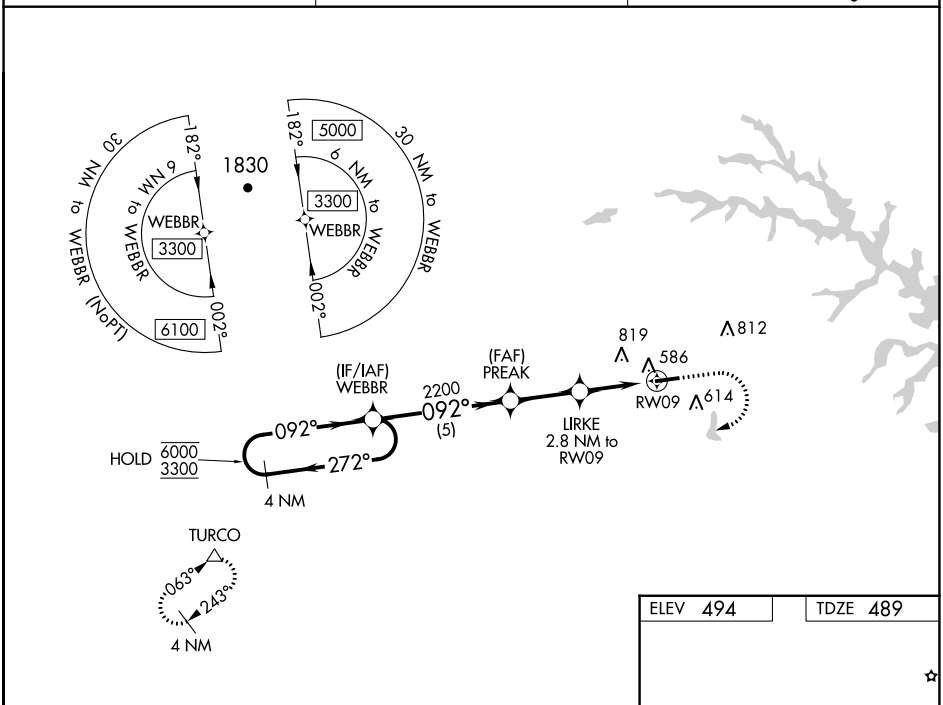

ELEV 494 TDZE 489

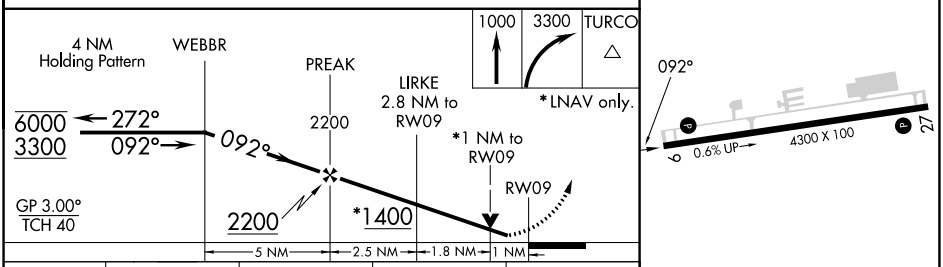

CATEGORY	A	B	C	D
LPV DA	739-¾	250 (300-¾)	NA	
LNAV/VNAV DA	748-¾	259 (300-¾)	NA	
LNAV MDA	840-1	351 (400-1)	NA	
C CIRCLING	900-1 406 (500-1)	960-1 466 (500-1)	NA	

REIL Rwys 9 and 27 L
MIRL Rwy 9-27 L

NE-3, 22 FEB 2024 to 21 MAR 2024

INSTRUMENT APPROACH PROCEDURE CHARTS

IFR ALTERNATE AIRPORT MINIMUMS

Pilots must review the IFR Alternate Minimums Notes to determine alternate airport suitability. ▲NA designation on the approach chart means that pilots may not use that approach as an alternate due to unmonitored facility, absence of weather reporting service, or lack of adequate navigation coverage. Approaches with the ▲NA designation are not listed in this section. ▲ designation on the approach chart indicates that the approach procedure has non-standard minimums (for aircraft other than helicopters) or restrictions (for all users) for its use as an alternate.

Alternate Minima (ref: 14 CFR 91.169)

	Precision Approach	Non-Precision Approach
Standard	**600-2**	**800-2**
▲Non-Standard or restrictions	As indicated below	As indicated below
Helicopters	For the selected approach: Ceiling: 200' above published ceiling Visibility: the greater of 1 SM visibility or the published visibility	
US Military (USA/USN/USAF)	See Service Regulations	

Note: For alternate airport flight planning purposes, precision approach operations include: ILS, PAR, and GLS, and Non-Precision approach operations include: NDB, VOR, LOC, TACAN, LDA, SDF, ASR, RNAV (GPS) and RNAV (RNP).

NAME — ALTERNATE MINIMUMS

ABINGDON, VA

VIRGINIA HIGHLANDS (VJI)……..**LOC Rwy 24**[12]
RNAV (GPS) Rwy 6[13]
RNAV (GPS) Rwy 24[3]

[1]NA when local weather not available.
[2]Categories A, B, 900-2, Category C, 900-2½, Category D, 1000-3.
[3]Category C, 800-2¼, Category D, 1000-3.

BALTIMORE, MD

BALTIMORE-WASHINGTON INTL THURGOOD MARSHALL (BWI)…….....…**ILS or LOC Rwy 10**[1]
ILS or LOC Rwy 15R[2]
ILS or LOC Rwy 28[1]
ILS or LOC Rwy 33L[2]
RNAV (GPS) Y Rwy 10[3]
RNAV (GPS) Y Rwy 15R[3]
RNAV (GPS) Y Rwy 28[3]
RNAV (GPS) Y Rwy 33L[3]

[1]LOC, Category D, 800-2¼.
[2]ILS, LOC, Category D, 800-2¼.
[3]Category D, 800-2¼.

NAME — ALTERNATE MINIMUMS

BALTIMORE, MD (CON'T)

MARTIN STATE (MTN)….....…**ILS or LOC Rwy 33**[12]
LOC Rwy 15[13]
RNAV (GPS) Rwy 15[4]
RNAV (GPS) Rwy 33[4]
VOR or TACAN Rwy 15[5]

NA when local weather not available.
[1]NA when control tower closed.
[2]LOC, Category D, 800-2¼.
[3]Categories A, B, 900-2; Category C, 900-2½; Category D, 900-2¾.
[4]Category D, 800-2¼.
[5]Categories A, B, 900-2; Category C, 900-2¾; Category D, 900-3.

BLACKSBURG, VA

VIRGINIA TECH/MONTGOMERY EXEC (BCB)……....…**RNAV (GPS) Rwy 13**
RNAV (GPS) Rwy 31

NA when local weather not available.
Category C, 900-2½.

BROOKNEAL, VA

BROOKNEAL/CAMPBELL COUNTY (0V4)……...**RNAV (GPS) Rwy 6**
RNAV (GPS) Rwy 24

NA when local weather not available.

NAME ALTERNATE MINIMUMS

BUMPASS, VA
LAKE
ANNA (7W4)……**RNAV (GPS) Rwy 8**
RNAV (GPS) Rwy 26
NA when local weather not available.
Categories A, B, 1100-3.

CAMBRIDGE, MD
CAMBRIDGE-DORCHESTER
RGNL (CGE)……**RNAV (GPS) Rwy 34**
RNAV (GPS)-A[1]
Category D, 800-2½.
[1]NA when local weather not available.

CHARLOTTESVILLE, VA
CHARLOTTESVILLE-
ALBEMARLE (CHO)……**ILS or LOC Rwy 3**[2]
RNAV (GPS) Rwy 3[3]
RNAV (GPS) Y Rwy 21[3]
RNAV (GPS) Z Rwy 21[1]
NA when local weather not available.
[1]Categories, A, B, C, D, 1000-4.
[2]ILS, Categories A, B, 700-2; Category C, 900-2½; Category D, 900-2¾. LOC, Category C, 900-2½; Category D, 900-2¾.
[3]Category C, 900-2½; Category D, 900-2¾.

CHASE CITY, VA
CHASE CITY
MUNI (CXE)……**RNAV (GPS) Rwy 18**[1]
RNAV (GPS) Rwy 36[2]
NA when local weather not available.
[1]Categories A, B, 1100-3.
[2]Categories A, B, 1000-3.

CLARKSVILLE, VA
LAKE COUNTRY
REGIONAL (W63)……**RNAV (GPS)-A**
RNAV (GPS)-B
NA when local weather not available.

CREWE, VA
CREWE
MUNI (W81)……**RNAV (GPS)-A**
RNAV (GPS)-B
NA when local weather not available.
Categories A, B, 1000-3.

CULPEPER, VA
CULPEPER RGNL (CJR)……**LOC Rwy 4**[1]
NDB RWY 4[1]
RNAV (GPS) Rwy 4[2]
RNAV (GPS) Rwy 22[2]
VOR-A[23]
[1]NA when FBO closed.
[2]NA when local weather not available.
[3]Category D, 800-2½.

NAME ALTERNATE MINIMUMS

CUMBERLAND, MD
GREATER CUMBERLAND
RGNL (CBE)……**LOC/DME Rwy 23**[14]
RNAV (GPS) Rwy 5[2]
RNAV (GPS) Rwy 23[3]
NA when local weather not available.
[1]Category A, 1000-2; Category B, 1400-2; Category C 1500-3, Category D 1600-3.
[2]Category A, 1100-2; Category B, 1400-2; Category C, 1500-3; Category D, 1600-3.
[3]Category A, 1100-2; Category B, 1400-2; Category C, 1500-3.
[4]NA when CBE FBO closed.

DANVILLE, VA
DANVILLE RGNL (DAN)……**ILS or LOC Rwy 2**
RNAV (GPS) Rwy 2
RNAV (GPS) Rwy 20
RNAV (GPS) Rwy 31
NA when local weather not available.

DOVER/CHESWOLD, DE
DELAWARE
AIRPARK (33N)……**RNAV (GPS) Rwy 9**
RNAV (GPS) Rwy 27
VOR Rwy 27
NA when local weather not available.
Category C, 800-2¼; Category D, 800-2½.

DUBLIN, VA
NEW RIVER
VALLEY (PSK)……**RNAV (GPS) Rwy 6**
RNAV (GPS) Rwy 24
VOR/DME Rwy 6
NA when local weather not available.
Category D, 800-2¼.

EASTON, MD
EASTON/NEWNAM
FLD (ESN)……**ILS or LOC Rwy 4**[1]
RNAV (GPS) Rwy 4[2]
RNAV (GPS) Rwy 22[2]
[1]ILS, LOC, NA when control tower closed.
[2]NA when local weather not available.

FARMVILLE, VA
FARMVILLE
RGNL (FVX)……**RNAV (GPS) Rwy 3**
RNAV (GPS) Rwy 21
NA when local weather not available.

FELKER AAF (KFAF)
FORT EUSTIS, VA……**RNAV (GPS) Rwy 14**
COPTER RNAV (GPS) Rwy 14
NA when control tower closed.

22 FEB 2024 to 21 MAR 2024
22 FEB 2024 to 21 MAR 2024

NAME ALTERNATE MINIMUMS

FORT MEADE (ODENTON), MD
TIPTON (FME)……..…..**RNAV (GPS) Rwy 10**
RNAV (GPS) Rwy 28
NA when local weather not available.
Category B, 900-2.

FRANKLIN, VA
FRANKLIN
RGNL (FKN)...……**RNAV (GPS) Rwy 9**
RNAV (GPS) Rwy 27
NA when local weather not available.

FREDERICK, MD
FREDERICK
MUNI (FDK)...……..…..**ILS or LOC Rwy 23[123]**
RNAV (GPS) Rwy 5[1]
RNAV (GPS) Y Rwy 23[4]
RNAV (GPS) Z Rwy 23[5]
[1]NA when local weather not available.
[2]NA when tower closed.
[3]LOC, Category C, 800-2½; Category D, 900-3.
[4]Category D, 800-2½.
[5]Category C, 800-2¼; Category D, 900-2¾.

FREDERICKSBURG, VA
SHANNON (EZF)……..**RNAV (GPS) Rwy 24**
Categories A, B, C, 1100-3
NA when local weather not available.

FRONT ROYAL, VA
FRONT ROYAL-WARREN
COUNTY (FRR)...…….....…..**RNAV (GPS)-A**
NA when local weather not available.
Categories A, B, 1200-2.

GAITHERSBURG, MD
MONTGOMERY COUNTY
AIRPARK (GAI)...…….....…….**RNAV (GPS)-A**
RNAV (GPS) Rwy 14
NA when local weather not available.

GALAX/HILLSVILLE, VA
TWIN COUNTY (HLX)……..…**RNAV (GPS) Rwy 1**
RNAV (GPS) Rwy 19
NA when local weather not available.
Category D, 800-2½.

GEORGETOWN, DE
DELAWARE
COASTAL (GED)……..……**RNAV (GPS) Rwy 4**
RNAV (GPS) Rwy 22
VOR Rwy 22
NA when local weather not available.

NAME ALTERNATE MINIMUMS

HAGERSTOWN, MD
HAGERSTOWN RGNL/RICHARD A
HENSON FLD (HGR)..……...**ILS or LOC Rwy 9[1]**
ILS or LOC Rwy 27[1]
RNAV (GPS) Rwy 9
RNAV (GPS) Rwy 27
VOR Rwy 9
NA when local weather not available.
[1]NA when control tower closed.

HOT SPRINGS, VA
INGALLS FLD (HSP)……..…..**RNAV (GPS) Rwy 7[1]**
RNAV (GPS) Rwy 25[2]
NA when local weather not available.
[1]Categories A, B, 1000-2; Category C, 1000-2¾, Category D, 1000-3.
[2]Category C, 800-2¼; Category D, 800-2½.

JONESVILLE, VA
LEE COUNTY (0VG)……..…..**RNAV (GPS) Rwy 7[1]**
RNAV (GPS) Rwy 25[2]
NA when local weather not available.
[1]Category C, 1200-3.
[2]Categories A, B, 900-2; Category C, 1200-3.

KENBRIDGE, VA
LUNENBURG
COUNTY (W31)……..**RNAV (GPS)-A**
RNAV (GPS)-B[1]
NA when local weather not available.
[1]Categories A, B, 1100-3.

LAWRENCEVILLE, VA
BRUNSWICK COUNTY (LVL)……....**RNAV (GPS)-A**
RNAV (GPS)-B
NA when local weather not available.
Categories A, B, 1100-3.

LEESBURG, VA
LEESBURG
EXEC (JYO)...…….....**RNAV (GPS) Rwy 17**
NA when local weather not available.
Category D, 1000-3.

LEONARDTOWN, MD
ST MARYS COUNTY
RGNL (2W6)...……..…....**RNAV (GPS) Rwy 11**
Category D, 800-2¼.

LOUISA, VA
LOUISA COUNTY/
FREEMAN FLD (LKU)...……...**RNAV (GPS) Rwy 9**
RNAV (GPS) Rwy 27
NA when local weather not available.

22 FEB 2024 to 21 MAR 2024

22 FEB 2024 to 21 MAR 2024

NAME ALTERNATE MINIMUMS

LURAY, VA
LURAY CAVERNS (LUA)…….**RNAV (GPS) Rwy 4[1]**
RNAV (GPS) Rwy 22[2]
VOR/DME-B[3]
NA when local weather not available.
[1]Categories A, B, 1400-2, Category C, 1400-3.
[2]Categories A, B, 1000-2, Category C, 1000-2¾.
[3]Categories A, B, 1300-2, Category C, 1300-3.

LYNCHBURG, VA
LYNCHBURG RGNL/PRESTON GLENN
FLD (LYH)....…..……..**ILS or LOC Rwy 4[1]**
RNAV (GPS) Rwy 4[2]
RNAV (GPS) Rwy 17[3]
RNAV (GPS) Rwy 22[4]
RNAV (GPS) Rwy 35[3]
VOR Rwy 22[5]
[1]LOC, Category B, 900-2, Category C, 900-2½, Category D, 900-2¾.
[2]Category B, 900-2; Category C, 900-2½; Category D, 900-2¾.
[3]Category B, 900-2.
[4]Categories A, B, 1100-2; Categories C, D, 1100-3.
[5]Categories A, B, 900-2; Category C, 900-2½, Category D, 900-2¾.

MARION/WYTHEVILLE, VA
MOUNTAIN
EMPIRE (MKJ)...……..**RNAV (GPS) Rwy 26**
Category C, 1900-3.

MARTINSVILLE, VA
BLUE RIDGE (MTV)…….....**LOC Rwy 31[1]**
RNAV (GPS) Rwy 13
RNAV (GPS) Rwy 31
Category D, 900-2¾.
NA when local weather not available.
[1]NA when MTV FBO closed.

MELFA, VA
ACCOMACK
COUNTY (MFV)……...……...……**LOC Rwy 3**
NA when airport operations closed.

MIDDLETOWN, DE
SUMMIT (EVY)……**NDB-A[1]**
RNAV (GPS) Rwy 17
RNAV (GPS) Y Rwy 35
RNAV (GPS) Z Rwy 35
NA when local weather not available.
[1]NA when Wilmington control tower closed.

NEW MARKET, VA
NEW MARKET (8W2)……..**RNAV (GPS)-A**
RNAV (GPS)-B
Categories A, B, 1100-3.
NA when local weather not available.

NAME ALTERNATE MINIMUMS

NEWPORT NEWS, VA
NEWPORT NEWS/WILLIAMSBURG
INTL (PHF)……**ILS or LOC Rwy 7[123]**
ILS or LOC Rwy 25[3]
LOC Rwy 20[14]
RNAV (GPS) Rwy 2[4]
RNAV (GPS) Rwy 7[4]
RNAV (GPS) Rwy 20[4]
[1]NA when control tower closed.
[2]NA when local weather not available.
[3]LOC, Category D, 800-2¼.
[4]Category D, 800-2¼.

NORFOLK, VA
CHESAPEAKE
RGNL (CPK)……**ILS or LOC Rwy 5**
RNAV (GPS) Rwy 5
RNAV (GPS) Rwy 23
NA when local weather not available.

HAMPTON ROADS
EXEC (PVG)…….....**RNAV (GPS) Rwy 10**
Category C, 800-2¼.

NORFOLK
INTL (ORF)……**ILS or LOC Rwy 5[1]**
ILS or LOC Rwy 23[1]
RNAV (GPS) Rwy 14[2]
RNAV (GPS) Rwy 32[2]
RNAV (GPS) Z Rwy 5[2]
RNAV (GPS) Z Rwy 23[2]
VOR Rwy 14[2]
VOR/DME Rwy 32[2]
[1]LOC, Category D, 900-2¾.
[2]Category D, 900-2¾.

OAKLAND, MD
GARRETT
COUNTY (2G4)...…….....…....…**VOR Rwy 9**
NA when local weather not available.

OCEAN CITY, MD
OCEAN CITY
MUNI (OXB)……**LOC Rwy 32[123]**
RNAV (GPS) Rwy 2[1]
RNAV (GPS) Rwy 14[1]
RNAV (GPS) Rwy 32[1]
VOR-A[4]
[1]NA when local weather not available.
[2]Category D, 800-2½.
[3]NA when FBO closed.
[4]Categories A, B, 900-2; Category C, 900-2½; Category D, 900-2¾.

22 FEB 2024 to 21 MAR 2024

22 FEB 2024 to 21 MAR 2024

NAME ALTERNATE MINIMUMS

ORANGE, VA
ORANGE
COUNTY (OMH)……**RNAV (GPS) Rwy 8**[1]
RNAV (GPS) Rwy 26[1]
VOR/DME-A[2]
NA when local weather not available.
[1]Categories A, B, 900-2.
[2]Categories A, B, 1600-2.

PETERSBURG, VA
TRI CITIES EXEC/DINWIDDIE
COUNTY (PTB)……**LOC Rwy 5**[1]
RNAV (GPS) Rwy 5
RNAV (GPS) Rwy 23
VOR Rwy 23
NA when local weather not available.
[1]NA when arpt unattended.

PHILLIPS AAF (KAPG)
ABERDEEN PROVING
GROUND, MD……**RNAV (GPS) Rwy 22**
NA when control tower closed.

RICHLANDS, VA
TAZEWELL
COUNTY (JFZ)……**LOC/DME Rwy 25**
RNAV (GPS) Rwy 7
RNAV (GPS) Rwy 25
NA when local weather not available.

RICHMOND, VA
RICHMOND INTL (RIC)……**ILS or LOC Rwy 16**
LOC, Categories C, D, 800-2½.

RICHMOND/ASHLAND, VA
HANOVER COUNTY
MUNI (OFP)……**LOC Rwy 16**[1]
RNAV (GPS) Rwy 16
RNAV (GPS) Rwy 34[1]
VOR Rwy 16
Category D, 900-2¾.
[1]NA when local weather not available.

NAME ALTERNATE MINIMUMS

ROANOKE, VA
ROANOKE/BLACKSBURG RGNL
(WOODRUM FLD) (ROA)……**ILS or LOC Rwy 34**[1]
LDA Y Rwy 6[2]
RNAV (GPS) Y Rwy 6[3]
RNAV (GPS) Y Rwy 24[4]
RNAV (GPS) Y Rwy 34[5]
RNAV (RNP) Z Rwy 34[6]
VOR/DME-A[7]
[1]ILS, LOC, Categories A, B, 900-2;
Category C, 1300-3; Category D, 1700-3.
[2]Categories A, B, 1600-2; Category C, 1600-3;
Category D, 1700-3.
[3]Categories A, B, 900-2; Category C, 1300-3;
Category D, 1700-3.
[4]Categories A, B, 1900-2;
Categories C, D, 1900-3.
[5]Categories A, B, C 1500-5; Category D, 1700-5.
[6]Categories A, B, C, D 1000-4.
[7]Category C, 1300-3; Category D, 1700-3.

SALISBURY, MD
SALISBURY-OCEAN CITY
WICOMICO RGNL (SBY)……**ILS or LOC Rwy 32**
RNAV (GPS) Rwy 5
RNAV (GPS) Rwy 14
RNAV (GPS) Rwy 23
RNAV (GPS) Rwy 32
VOR Rwy 5
NA when local weather not available.

SOUTH BOSTON, VA
WILLIAM M TUCK (W78)……**RNAV (GPS) Rwy 1**
VOR-A[1]
NA when local weather not available.
[1]Category C 800-2¼.

SOUTH HILL, VA
MECKLENBURG-
BRUNSWICK RGNL (AVC)……**LOC Rwy 1**
NA when AVC FBO closed.

STAFFORD, VA
STAFFORD
RGNL (RMN)……**RNAV (GPS) Rwy 33**
NA when local weather not available.
Category D, 900-2¾.

STAUNTON-WAYNESBORO-HARRISONBURG, VA
SHENANDOAH VALLEY
RGNL (SHD)……**ILS or LOC Rwy 5**[1]
NDB Rwy 5[2]
RNAV (GPS) Rwy 5[2]
RNAV (GPS) Rwy 23[2]
NA when local weather not available.
[1]LOC, Category D, 900-2¾.
[2]Category D, 900-2¾.

22 FEB 2024 to 21 MAR 2024
22 FEB 2024 to 21 MAR 2024

NAME ALTERNATE MINIMUMS

STEVENSVILLE, MD

BAY BRIDGE (W29)……**RNAV (GPS) Rwy 29**
NA when local weather not available.

SUFFOLK, VA

SUFFOLK
EXEC (SFQ)……**RNAV (GPS) Rwy 7**
RNAV (GPS) Rwy 22
RNAV (GPS) Rwy 25
NA when local weather not available.

TAPPAHANNOCK, VA

TAPPAHANNOCK/
ESSEX COUNTY (XSA)……**RNAV (GPS) Rwy 10**
RNAV (GPS) Rwy 28
NA when local weather not available.

WAKEFIELD, VA

WAKEFIELD
MUNI (AKQ)……**RNAV (GPS) Rwy 20**
Categories A, B, C, D, 1100-3.

WALLOPS ISLAND, VA

WALLOPS FLIGHT
FACILITY (WAL)……**RNAV (GPS) Rwy 4**[2]
RNAV (GPS) Rwy 10[2]
RNAV (GPS) Rwy 17[2]
RNAV (GPS) Rwy 22[2]
RNAV (GPS) Rwy 28[2]
RNAV (GPS) Rwy 35[2]
VOR/DME or TACAN Rwy 10[1]
VOR or TACAN Rwy 17[2]
NA when local weather not available.
[1]Categories A, B, 900-2; Category C, 900-2½; Category D, 900-2¾.
[2]Category D, 900-2¾.

WARRENTON, VA

WARRENTON/
FAUQUIER (HWY)……**RNAV (GPS) Rwy 15**
RNAV (GPS) Rwy 33
VOR Rwy 15[1]
NA when local weather not available.
[1]Category D 800-2¼.

WASHINGTON, DC

MANASSAS RGNL/HARRY P DAVIS
FLD (HEF)……**ILS or LOC Rwy 16L**[1]
RNAV (GPS) Rwy 16L[2]
RNAV (GPS) Rwy 16R[2]
RNAV (GPS) Rwy 34L[2]
RNAV (GPS) Rwy 34R[2]
NA when local weather not available.
[1]ILS, Category C, 700-2; Category D, 700-2¼.
LOC, Category D, 800-2¼.
[2]Category D, 800-2¼.

NAME ALTERNATE MINIMUMS

WASHINGTON, DC (CON'T)

RONALD REAGAN WASHINGTON
NTL (DCA)……**ILS or LOC Rwy 1**[1]
LDA Y Rwy 19[2]
LDA Z Rwy 19[3]
RNAV (GPS) Rwy 15[4]
[1]LOC, Category B, 900-2; Category C, 900-2¾; Category D, 900-3.
[2]LDA, Categories A, B, C, D, 1100-3.
[3]Category C, 900-2; Category D, 900-3.
[4]Category C, 900-2½; Category D, 900-3.

WASHINGTON DULLES
INTL (IAD)……**ILS or LOC Rwy 1R**[1]
ILS or LOC Rwy 19L[2]
ILS or LOC/DME Rwy 1C[1]
ILS or LOC/DME Rwy 1L[1]
ILS or LOC/DME Rwy 12[1]
ILS or LOC/DME Rwy 19C[1]
ILS or LOC/DME Rwy 19R[1]
RNAV (GPS) Rwy 1L[3]
RNAV (GPS) Rwy 12[3]
RNAV (GPS) Rwy 19R[3]
RNAV (GPS) Y Rwy 1C[3]
RNAV (GPS) Y Rwy 1R[3]
RNAV (GPS) Y Rwy 19C[3]
RNAV (GPS) Y Rwy 19L[3]
VOR/DME Rwy 12[3]
[1]LOC, Category D, 800-2½.
[2]ILS, Categories A, B, C, D, 700-2.
[3]Category D, 800-2½.

WEST POINT, VA

MIDDLE PENINSULA
RGNL (FYJ)……**RNAV (GPS)-B**
RNAV (GPS) Rwy 10
VOR-A
NA when local weather not available.

WESTMINSTER, MD

CARROLL COUNTY RGNL/JACK B POAGE
FLD (DMW)……**RNAV (GPS) Rwy 34**
NA when local weather not available.

WILLIAMSBURG, VA

WILLIAMSBURG-
JAMESTOWN (JGG)……**RNAV (GPS)-C**
VOR-B
NA when local weather not available.
Categories A, B, C, 1100-3.

22 FEB 2024 to 21 MAR 2024

22 FEB 2024 to 21 MAR 2024

NAME	ALTERNATE MINIMUMS	NAME	ALTERNATE MINIMUMS

WILMINGTON, DE

NEW CASTLE (ILG)……**ILS or LOC Rwy 1[12]**
RNAV (GPS) Rwy 1[3]
RNAV (GPS) Rwy 9[3]
RNAV (GPS) Rwy 19[3]
RNAV (GPS) Rwy 27[3]
VOR Rwy 9[3]
VOR Rwy 27[3]

NA when local weather not available.
[1]NA when control tower closed.
[2]LOC, Category D, 800-2¼.
[3]Category D, 800-2¼.

WINCHESTER, VA

WINCHESTER
RGNL (OKV)...……**RNAV (GPS) Rwy 14[1]**
RNAV (GPS) Rwy 32
VOR/DME-A

NA when local weather not available.
[1]Category D, 800-2½.

WISE, VA

LONESOME
PINE (LNP)……**RNAV (GPS) Rwy 6**
RNAV (GPS) Rwy 24

NA when local weather not available.
Category D, 900-2¾.

IFR TAKEOFF MINIMUMS AND (OBSTACLE) DEPARTURE PROCEDURES

Civil Airports and Selected Military Airports

ALL USERS: Airports that have Departure Procedures (DPs) designed specifically to assist pilots in avoiding obstacles during the climb to the minimum enroute altitude, and/or airports that have civil IFR takeoff minimums other than standard, are listed below. Takeoff Minimums and Departure Procedures apply to all runways unless otherwise specified. An entry may also be listed that contains only Takeoff Obstacle Notes. Altitudes, unless otherwise indicated, are minimum altitudes in MSL.

DPs specifically designed for obstacle avoidance are referred to as Obstacle Departure Procedures (ODPs) and are textually described below, or published separately as a graphic procedure. If the ODP is published as a graphic procedure, its name will be listed below, and it can be found in either this volume (civil), or the applicable military volume, as appropriate. Users will recognize graphic obstacle DPs by the term "(OBSTACLE)" included in the procedure title; e.g., TETON TWO (OBSTACLE). If not specifically assigned an ODP, SID, or RADAR vector as part of an IFR clearance, an ODP may be required to be flown for obstacle clearance, even though not specifically stated in the IFR clearance. When doing so in this manner, ATC should be informed when the ODP being used contains a specified route to be flown, restrictions before turning, and/or altitude restrictions.

Some ODPs, which are established solely for obstacle avoidance, require a climb in visual conditions to cross the airport, a fix, or a NAVAID in a specified direction, at or above a specified altitude. These procedures are called Visual Climb Over Airport (VCOA). To ensure safe and efficient operations, the pilot must verbally request approval from ATC to fly the VCOA when requesting their IFR clearance.

At some locations where an ODP has been established, a diverse vector area (DVA) may be created to allow RADAR vectors to be used in lieu of an ODP. DVA information will state that headings will be as assigned by ATC and climb gradients, when applicable, will be published immediately following the specified departure procedure.

Graphic DPs designed by ATC to standardize traffic flows, ensure aircraft separation and enhance capacity are referred to as "Standard Instrument Departures (SIDs)". SIDs also provide obstacle clearance and are published under the appropriate airport section. ATC clearance must be received prior to flying a SID.

CIVIL USERS NOTE: Title 14 Code of Federal Regulations Part 91 prescribes standard takeoff rules and establishes takeoff minimums for certain operators as follows: (1) For aircraft, other than helicopters, having two engines or less – one statute mile visibility. (2) For aircraft having more than two engines – one-half statute mile visibility. (3) For helicopters – one-half statute mile visibility. These standard minima apply in the absence of any different minima listed below.

MILITARY USERS NOTE: Civil (nonstandard) takeoff minima are published below. For military takeoff minima, refer to appropriate service directives.

22 FEB 2024 to 21 MAR 2024
22 FEB 2024 to 21 MAR 2024

ABINGDON, VA

VIRGINIA HIGHLANDS (VJI)

TAKEOFF MINIMUMS AND (OBSTACLE) DEPARTURE PROCEDURES

AMDT 3 03DEC20 (20338) (FAA)

TAKEOFF MINIMUMS:

Rwy 6, 300-2 w/ min. climb of 205' per NM to 2600, or std. w/ min. climb of 415' per NM to 2300, or 2000-3 for VCOA.

Rwy 24, std. w/ min. climb of 215' per NM to 5500, or 2000-3 for VCOA.

DEPARTURE PROCEDURE:

Rwy 6, climb on heading 061° to intercept HMV VORTAC R-034 to 5500 before proceeding on course.

Rwy 24, climb on heading 241° to 3700 before proceeding on course.

VCOA:

Rwys 6, 24, obtain ATC approval for VCOA when requesting IFR clearance. Climb in visual conditions to cross Virginia Highlands at or above 3900 before proceeding on course.

TAKEOFF OBSTACLE NOTES:

Rwy 6, tree 214' from DER, 548' right of centerline, 2111' MSL.
Electrical system 504' from DER, 314' left of centerline, 19' AGL/2122' MSL.
Tree 2942' from DER, 903' right of centerline, 2240' MSL.
Tree 4129' from DER, 228' left of centerline, 2202' MSL.
Tree 1.6 NM from DER, 2617' left of centerline, 2379' MSL.
Rwy 24, building 12' from DER, 496' left of centerline, 50' AGL/2086' MSL.
Trees beginning 2221' from DER, 262' right of centerline, up to 2168' MSL.
Tree 3591' from DER, 14' left of centerline, 2167' MSL.
Trees beginning 3962' from DER, 279' right of centerline, up to 2200' MSL.

ANNAPOLIS, MD

LEE (ANP)

TAKEOFF MINIMUMS AND (OBSTACLE) DEPARTURE PROCEDURES

ORIG 27DEC01 (01361) (FAA)

TAKEOFF MINIMUMS:

Rwy 30, 300-1 or std. with a min. climb of 410' per NM to 400.

DEPARTURE PROCEDURE:

Rwy 12, climb runway heading to 700 before proceeding on course.

Rwy 30, climb runway heading to 1000 before proceeding right on course. Climb runway heading to 700 before proceeding left on course.

TAKEOFF OBSTACLE NOTES:

Rwy 12, cross DER at or above 35' AGL/66' MSL.

Rwy 30, trees, 1433' from DER, 85' left of centerline, 100' AGL/139' MSL.
Cross DER at or above 35' AGL/66' MSL.

BALTIMORE, MD

BALTIMORE/WASHINGTON INTL THURGOOD MARSHALL (BWI)

TAKEOFF MINIMUMS AND (OBSTACLE) DEPARTURE PROCEDURES

AMDT 10A 21MAY20 (20142) (FAA)

TAKEOFF MINIMUMS:

Rwy 33L, std. w/min. climb of 268' per NM to 1900.

Rwy 33R, std. w/min. climb of 255' per NM to 2000.

DEPARTURE PROCEDURE:

Rwy 28, climb heading 285° to 900' before turning right.

TAKEOFF OBSTACLE NOTES:

Rwy 10, lighting 9' from DER, 54' left of centerline, 1' AGL/127' MSL.
Lighting 9' from DER, 54' right of centerline, 1' AGL/127' MSL.
Building beginning 51' from DER, 319' left of centerline, up to 10' AGL/133' MSL.
Tree 1143' from DER, 549' left of centerline, 65' AGL/157' MSL.
Trees beginning 1190' from DER, 457' left of centerline, up to 67' AGL/160' MSL.
Tree 1210' from DER, 452' left of centerline, 68' AGL/161' MSL.
Trees beginning 1230' from DER, 384' left of centerline, up to 70' AGL/163' MSL.
Rwy 15L, tree 615' from DER, 641' left of centerline, 47' AGL/131' MSL.
Trees beginning 646' from DER, 608' left of centerline, up to 52' AGL/136' MSL.
Tree 748' from DER, 624' left of centerline, 69' AGL/148' MSL.
Trees beginning 773' from DER, 647' left of centerline, up to 73' AGL/152' MSL.
Pole, tree beginning 920' from DER, 617' left of centerline, up to 79' AGL/161' MSL.
Trees beginning 962' from DER, 706' left of centerline, up to 77' AGL/162' MSL.
Antenna 1067' from DER, 640' left of centerline, 68' AGL/164' MSL.
Pole, tree beginning 1068' from DER, 548' left of centerline, up to 75' AGL/169' MSL.
Pole, antenna beginning 1762' from DER, 941' right of centerline, up to 61' AGL/179 MSL.
Trees beginning 1872' from DER, 750' right of centerline, up to 68' AGL/181' MSL.
Trees beginning 2237' from DER, 660' right of centerline, up to 183' MSL.
Tree 2712' from DER, 1182' right of centerline, 73' AGL/194' MSL.
Tree 2740' from DER, 1117' right of centerline, 74' AGL/198' MSL.
Trees beginning 2770' from DER, 1061' right of centerline, up to 207' MSL.
Rwy 15R, NAVAID 1' from DER, 85' right of centerline, 2' AGL/130' MSL.
Tree 1086' from DER, 755' right of centerline, 65' AGL/173' MSL.
Trees beginning 1126' from DER, 752' right of centerline, up to 77' AGL/184' MSL.
Rwy 28, lighting 50' from DER, 6' left of centerline, 2' AGL/141' MSL.
Lighting 50' from DER, 6' right of centerline, 2' AGL/141' MSL.
Pole 150' from DER, 40' right of centerline, 4' AGL/143' MSL.
Tree 1293' from DER, 842' left of centerline, 79' AGL/174' MSL.
Trees beginning 1389' from DER, 252' left of centerline, up to 87' AGL/182' MSL.
Trees beginning 1582' from DER, 299' left of centerline, up to 96' AGL/188' MSL.
Trees beginning 1632' from DER, 264' left of centerline, up to 197' MSL.
Tree 2830' from DER, 871' right of centerline, 134' AGL/211' MSL.
Trees beginning 2834' from DER, 839' right of centerline, up to 135' AGL/212' MSL.
Rwy 33L, fence 161' from DER, 528' right of centerline, 10' AGL/145' MSL.
Fence 203' from DER, 520' right of centerline, 18' AGL/149' MSL.
Pole 516' from DER, 573' right of centerline, 33' AGL/156' MSL.
Tree 910' from DER, 595' left of centerline, 82' AGL/165' MSL.
Trees beginning 1662' from DER, 852' right of centerline, up to 41' AGL/187' MSL.
Tree 1715' from DER, 888' right of centerline, 34' AGL/188' MSL.
Trees beginning 1716' from DER, 904' right of centerline, up to 34' AGL/190' MSL.
Trees beginning 2189' from DER, 940' right of centerline, up to 63' AGL/205' MSL
Trees beginning 2228' from DER, 877' right of centerline, up to 73' AGL/214' MSL.
Building, antenna, bldg_twr beginning 4693' from DER, 877' right of centerline, up to 146' AGL/265' MSL.
Rwy 33R, fence 400' from DER, 601' left of centerline, 1' AGL/157' MSL.
Fence 629' from DER, 600' left of centerline, 2' AGL/159' MSL.
Pole 758' from DER, 677' left of centerline, 19' AGL/176' MSL.
Building 880' from DER, 654' left of centerline, 25' AGL/181' MSL.
Building, pole beginning 951' from DER, 611' left of centerline, up to 29' AGL/184' MSL.
CON'T

22 FEB 2024 to 21 MAR 2024
22 FEB 2024 to 21 MAR 2024

BALTIMORE, MD (CON'T)

BALTIMORE/WASHINGTON INTL THURGOOD MARSHALL (BWI) (CON'T)

Rwy 33R (CON'T), trees beginning 1072' from DER, 518' right of centerline, up to 54' AGL/188' MSL.
Tree 1530' from DER, 807' right of centerline, 56' AGL/202' MSL.
Building, sign beginning 1556' from DER, 916' left of centerline, up to 42' AGL/198' MSL.
Tree 1565' from DER, 849' right of centerline, 63' AGL/212' MSL.
Tree 1582' from DER, 759' right of centerline, 64' AGL/213' MSL.
Trees beginning 1593' from DER, 779' right of centerline, up to 68' AGL/218' MSL.
Trees beginning 1662' from DER, 794' right of centerline, up to 63' AGL/220' MSL.
Trees beginning 1748' from DER, 791' right of centerline, up to 62' AGL/223' MSL.
Trees beginning 1785' from DER, 846' right of centerline, up to 64' AGL/226' MSL.
Tree 1866' from DER, 849' right of centerline, 59' AGL/230' MSL.
Tree 1907' from DER, 923' right of centerline, 60' AGL/236' MSL.
Trees beginning 1930' from DER, 858' right of centerline, up to 72' AGL/250' MSL.
Trees beginning 1985' from DER, 903' right of centerline, up to 68' AGL/253' MSL.
Trees beginning 2200' from DER, 967' right of centerline, up to 69' AGL/260' MSL.
Tree 2241' from DER, 1052' right of centerline, 75' AGL/261' MSL.
Tree pole beginning 2243' from DER, 15' right of centerline, up to 76' AGL/265' MSL.
Electrical_system 2452' from DER, 903' left of centerline, 44' AGL/204' MSL.
Trees beginning 2574' from DER, 685' left of centerline, up to 49' AGL/209' MSL.
Tree 2894' from DER, 902' left of centerline, 64' AGL/217' MSL.
Trees beginning 2908' from DER, 908' left of centerline, up to 69' AGL/220' MSL.
Trees beginning 2949' from DER, 348' left of centerline, up to 65' AGL/222' MSL.
Trees beginning 2984' from DER, 201' left of centerline, up to 79' AGL/231' MSL.
Trees beginning 3121' from DER, 154' left of centerline, up to 79' AGL/235' MSL.
Trees beginning 3151' from DER, 409' left of centerline, up to 84' AGL/237' MSL.
Trees beginning 3165' from DER, 89' left of centerline, up to 73' AGL/238' MSL.
Trees beginning 3185' from DER, 49' left of centerline, up to 73' AGL/241' MSL.
Trees beginning 3242' from DER, 122' left of centerline, up to 71' AGL/242' MSL.
Trees beginning 3252' from DER, 87' left of centerline, up to 73' AGL/244' MSL.
Trees beginning 3283' from DER, 50' left of centerline, up to 65' AGL/246' MSL.
Trees beginning 3373' from DER, 78' left of centerline, up to 62' AGL/248' MSL.
Trees beginning 3397' from DER, 2' left of centerline, up to 59' AGL/250' MSL.
Tree, pole beginning 3791' from DER, 20' left of centerline, up to 80' AGL/252' MSL.
Trees beginning 4001' from DER, 92' left of centerline, up to 75' AGL/255' MSL.
Trees beginning 4024' from DER, 312' right of centerline, up to 80' AGL/266' MSL.
Tree, pole beginning 4032' from DER, 55' right of centerline, up to 66' AGL/274' MSL.
Tree 4060' from DER, 1206' left of centerline, 85' AGL/257' MSL.
Trees beginning 4062' from DER, 34' left of centerline, up to 86' AGL/264' MSL.
Tree, pole beginning 4071' from DER, 2' right of centerline, up to 74' AGL/280' MSL.
Trees beginning 4157' from DER, 26' left of centerline, up to 75' AGL/268' MSL.
Trees beginning 4373' from DER, 333' left of centerline, up to 79' AGL/272' MSL.
Trees beginning 4384' from DER, 82' left of centerline, up to 68' AGL/275' MSL.
Trees beginning 4469' from DER, 87' left of centerline, up to 84' AGL/281' MSL.
Trees beginning 4511' from DER, 39' left of centerline, up to 73' AGL/282' MSL.
Trees beginning 4564' from DER, 610' right of centerline, up to 76' AGL/281' MSL.
Trees beginning 4600' from DER, 843' left of centerline, up to 65' AGL/283' MSL.
Trees beginning 4606' from DER, 213' left of centerline, up to 82' AGL/284' MSL.
Trees beginning 4635' from DER, 121' left of centerline, up to 85' AGL/289' MSL.
Trees beginning 5250' from DER, 345' left of centerline, up to 96' AGL/291' MSL.
Tree 1 NM from DER, 1991' left of centerline, 88' AGL/300' MSL.

MARTIN STATE (MTN)

TAKEOFF MINIMUMS AND (OBSTACLE) DEPARTURE PROCEDURES
AMDT 5 05MAR15 (15064) (FAA)

TAKEOFF MINIMUMS:
Rwy 33,std. w/min. climb of 215' per NM to 1700 or 1300-2½ for climb in visual conditions.

VCOA:
Rwy 33, obtain ATC approval for climb in visual conditions when requesting IFR clearance. Climb in visual conditions to cross Martin State airport at or above 1200 before proceeding on course.

TAKEOFF OBSTACLE NOTES:
Rwy 15, trees 625' from DER, 184' right of centerline, up to 20' AGL/29' MSL.
Pole and trees beginning 1689' from DER, 580' left of centerline, up to 89' AGL/97' MSL.
Trees beginning 2568' from DER, 68' right of centerline, up to 92' AGL/103' MSL.
Trees beginning 2906' from DER, 550' left of centerline, up to 100' AGL/109' MSL.
Rwy 33, terrain 91' from DER, 482' right of centerline, 0' AGL/25' MSL.
Poles and trees beginning 1170' from DER, 3' left of centerline, up to 84' AGL/133' MSL.
Poles and trees beginning 1175' from DER, 10' right of centerline, up to 79' AGL/128' MSL.
Trees beginning 3108' from DER, 8' left of centerline, up to 86' AGL/145' MSL.
Trees beginning 2843' from DER, 14' right of centerline, up to 96' AGL/175' MSL.

BLACKSBURG, VA
VIRGINIA TECH/MONTGOMERY EXEC (BCB)
TAKEOFF MINIMUMS AND (OBSTACLE) DEPARTURE PROCEDURES
AMDT 6 10SEP20 (21280) (FAA)
TAKEOFF MINIMUMS:
Rwy 13, 400-1½ or std. w/min. climb of 460' per NM to 2600.
DEPARTURE PROCEDURE:
Rwy 13, climbing right turn to heading 200° to 3400 before proceeding on course.
Rwy 31, climbing left turn to heading 235° to 4100 before proceeding on course.
TAKEOFF OBSTACLE NOTES:
Rwy 13, trees, lighting, sign beginning abeam DER, 71' right of centerline, up to 2187' MSL.
Terrain 69' from DER, 497' left of centerline, 2134' MSL.
Tree, terrain beginning 82' from DER, 209' left of centerline, up to 2180' MSL.
Trees, terrain beginning 261' from DER, 216' left of centerline, up to 2184' MSL.
Trees beginning 775' from DER, 294' left of centerline, up to 2212' MSL.
Trees, antenna beginning 891' from DER, 256' left of centerline, up to 2216' MSL.
Tree 2907' from DER, 50' right of centerline, 2195' MSL.
Tree 3068' from DER, 73' right of centerline, 2201' MSL.
Tree 3114' from DER, 190' right of centerline, 2208' MSL.
Tree 4019' from DER, 1535' left of centerline, 2226' MSL.
Tree 4324' from DER, 1403' left of centerline, 2228' MSL.
Tree 4362' from DER, 1533' left of centerline, 2233' MSL.
Tree 4370' from DER, 1248' left of centerline, 2238' MSL.
Tree 4466' from DER, 1637' left of centerline, 2240' MSL.
Trees beginning 4472' from DER, 1157' left of centerline, up to 2260' MSL.
Trees beginning 5031' from DER, 1039' left of centerline, up to 2269' MSL.
Tree 5059' from DER, 1538' left of centerline, 2288' MSL.
Trees beginning 5186' from DER, 1256' left of centerline, up to 2307' MSL.
Trees beginning 5214' from DER, 1591' left of centerline, up to 2314' MSL.
Trees beginning 5336' from DER, 1199' left of centerline, up to 2327' MSL.
Trees beginning 5366' from DER, 1693' left of centerline, up to 2343' MSL.
Trees beginning 5411' from DER, 1149' left of centerline, up to 2356' MSL.
Trees beginning 5535' from DER, 1150' left of centerline, up to 2366' MSL.
Trees beginning 5668' from DER, 1097' left of centerline, up to 2404' MSL.
Trees beginning 5816' from DER, 1264' left of centerline, up to 2414' MSL.
Trees beginning 5862' from DER, 1018' left of centerline, up to 2435' MSL.
Trees beginning 5960' from DER, 1178' left of centerline, up to 2453' MSL.
Trees, building, terrain, transmission line beginning 5983' from DER, 855' left of centerline, up to 2459' MSL.
Tree 1.2 NM from DER, 1203' left of centerline, 2322' MSL.
Rwy 31, pole 22' from DER, 168' right of centerline, 52' AGL/2149' MSL.
Pole 92' from DER, 75' left of centerline, 40' AGL/2140' MSL.
Pole 139' from DER, 61' right of centerline, 57' AGL/2150' MSL.
Tree 157' from DER, 487' left of centerline, 2149' MSL.
Pole 402' from DER, 600' right of centerline, 73' AGL/2157' MSL.
Poles, trees beginning 571' from DER, 28' right of centerline, up to 78' AGL/2162' MSL.

22 FEB 2024 to 21 MAR 2024
22 FEB 2024 to 21 MAR 2024

BLACKSTONE, VA
ALLEN C. PERKINSON BLACKSTONE AAF (BKT)
TAKEOFF MINIMUMS AND (OBSTACLE) DEPARTURE PROCEDURES
AMDT 3 03APR14 (14093) (FAA)
TAKEOFF MINIMUMS:
Rwys 1, 19, NA - environmental.
DEPARTURE PROCEDURE:
Rwy 4, climb heading 044° to 1300 before turning left.
TAKEOFF OBSTACLE NOTES:
Rwy 4, sign and trees beginning 12' from DER, 177' left of centerline, up to 100' AGL/511' MSL.
Trees beginning 779' from DER, 707' right of centerline, up to 100' AGL/508' MSL.
Rwy 22, terrain, trees beginning 178' from DER, 426' left of centerline, up to 100' AGL/507' MSL.
Trees beginning 2624' from DER, 325' right of centerline, up to 100' AGL/507' MSL.
NOTE: Do not overfly ammunition dump 1.1 NM south southwest of runway 4.

BLUEGRASS (9VA5)
BLUEMONT, VA
TAKEOFF MINIMUMS AND (OBSTACLE) DEPARTURE PROCEDURES
ORIG 08SEP22 (22251) (USN)
DEPARTURE PROCEDURE:
NA.

BOWIE, MD

FREEWAY (W00)

TAKEOFF MINIMUMS AND (OBSTACLE) DEPARTURE PROCEDURES

AMDT 3 22JUN17 (17173) (FAA)

TAKEOFF MINIMUMS:

Rwy 18, 300-2 or std. w/min. climb of 391' per NM to 400.

Rwy 36, 300-2 or std. w/min. climb of 726' per NM to 500.

TAKEOFF OBSTACLE NOTES:

Rwy 18, tree 134' from DER, 505' right of centerline, 100' AGL/225' MSL.
Trees beginning 174' from DER, 38' right of centerline, up to 100' AGL/228' MSL.
Trees 254' from DER, 195' left of centerline, 100' AGL/232' MSL.
Trees beginning 293' from DER, 144' left of centerline, up to 100' AGL/242' MSL.
Trees beginning 513' from DER, 89' right of centerline, up to 100' AGL/235' MSL.
Tree 593' from DER, 378' left of centerline, 100' AGL/245' MSL.
Tree 632' from DER, 611' left of centerline, 100' AGL/251' MSL.
Trees beginning 812' from DER, 140' right of centerline, up to 100' AGL/245' MSL.
Trees beginning 852' from DER, 93' left of centerline, up to 100' AGL/255' MSL.
Tree 932' from DER, 560' left of centerline, 100' AGL/258' MSL.
Trees beginning 1111' from DER, 8' right of centerline, up to 100' AGL/248' MSL.
Trees beginning 1151' from DER, 42' left of centerline, up to 100' AGL/265' MSL.
Trees beginning 1271' from DER, 123' left of centerline, up to 100' AGL/268' MSL.
Trees beginning 1533' from DER, 30' right of centerline, up to 100' AGL/279' MSL.
Trees beginning 2388' from DER, 72' left of centerline, up to 100' AGL/271' MSL.
Trees beginning 2467' from DER, 20' left of centerline, up to 100' AGL/274' MSL.
Trees beginning 2807' from DER, 203' left of centerline, up to 100' AGL/281' MSL.
Trees beginning 3146' from DER, 152' left of centerline, up to 100' AGL/284' MSL.
Trees beginning 3485' from DER, 1087' left of centerline, up to 100' AGL/297' MSL.
Trees beginning 3590' from DER, 50' left of centerline, up to 100' AGL/319' MSL.

Rwy 36, trees beginning 58' from DER, 190' right of centerline, up to 100' AGL/274' MSL.
Vehicles on road beginning 112' from DER, on centerline, 15' AGL/167' MSL.
Tree 138' from DER, 42' left of centerline, 100' AGL/271' MSL.
Trees beginning 178' from DER, 121' left of centerline, up to 100' AGL/274' MSL.
Trees beginning 357' from DER, 8' right of centerline, up to 100' AGL/281' MSL.
Trees beginning 1116' from DER, 355' left of centerline, up to 100' AGL/278' MSL.
Trees beginning 1335' from DER, 163' right of centerline, up to 100' AGL/291' MSL.
Trees beginning 1375' from DER, 70' left of centerline, up to 100' AGL/288' MSL.
Trees beginning 1634' from DER, 32' right of centerline, up to 100' AGL/294' MSL.
Trees beginning 1674' from DER, 18' left of centerline, up to 100' AGL/294' MSL.
Trees beginning 2272' from DER, 83' right of centerline, up to 100' AGL/297' MSL.
Trees beginning 2393' from DER, 616' left of centerline, up to 100' AGL/297' MSL.
Trees beginning 2531' from DER, 4' right of centerline, up to 100' AGL/301' MSL.
T-L tower, trees beginning 2587' from DER, 3' left of centerline, up to 133' AGL/382' MSL.

22 FEB 2024 to 21 MAR 2024
22 FEB 2024 to 21 MAR 2024

BRIDGEWATER, VA

BRIDGEWATER AIRPARK (VBW)

TAKEOFF MINIMUMS AND (OBSTACLE) DEPARTURE PROCEDURES

AMDT 2A 15DEC11 (11349) (FAA)

TAKEOFF MINIMUMS:

Rwy 15, 300-2¼ w/min. climb of 280'/NM to 3900, or std. w/min. climb of 440'/NM to 2600, or 2400-3 for climb in visual conditions.

Rwy 33, 800-2½ w/min. climb of 390'/NM to 3900, or std. w/min. climb of 522' per NM to 2800, or 2400-3 for climb in visual conditions.

DEPARTURE PROCEDURE:

Rwy 15, climb heading 152° to 3900, or for climb in visual conditions, cross Bridgewater Air Park at or above 3400 before proceeding on course.

Rwy 33, climb heading 347° to 5000, or for climb in visual conditions, cross Bridgewater Air Park at or above 3400 before proceeding on course.

TAKEOFF OBSTACLE NOTES:

Rwy 15, vehicles on roadway 53' from DER, 14' right of centerline, 15' AGL/1180' MSL.
Trees beginning 158' from DER, 259' right of centerline, up to 100' AGL/1279' MSL.
Trees beginning 499' from DER, 628' left of centerline, up to 100' AGL/1279' MSL.
Pole 908' from DER, 183' left of centerline, 35' AGL/1200' MSL.
Trees beginning 3205' from DER, 1329' right of centerline, up to 100' AGL/1359' MSL.

Rwy 33, trees beginning 318' from DER, 252' right of centerline, up to 100' AGL/1249' MSL.
Trees beginning 470' from DER, 191' left of centerline, up to 100' AGL/1249' MSL.

BROOKNEAL, VA

BROOKNEAL/CAMPBELL COUNTY (0V4)

TAKEOFF MINIMUMS AND (OBSTACLE) DEPARTURE PROCEDURES

AMDT 1 17OCT13 (13290) (FAA)

TAKEOFF OBSTACLE NOTES:

Rwy 6, multiple trees beginning 48' from DER, 314' left of centerline, up to 100' AGL/626' MSL.
Multiple trees beginning 31' from DER, 341' right of centerline, up to 100' AGL/673' MSL.
Fence beginning 162' from DER, 379' right of centerline, up to 8' AGL/607' MSL.
Rwy 24, multiple trees beginning 61' from DER, 8' left of centerline, up to 100' AGL/692' MSL.
Multiple trees beginning 1938' from DER, 27' right of centerline, up to 100' AGL/677' MSL.

BUMPASS, VA

LAKE ANNA (7W4)

TAKEOFF MINIMUMS AND (OBSTACLE) DEPARTURE PROCEDURES

ORIG 15DEC11 (11349) (FAA)

DEPARTURE PROCEDURE:

Rwy 8, climb heading 085° to 800 before turning.
Rwy 26, climb heading 265° to 800 before turning.

TAKEOFF OBSTACLE NOTES:

Rwy 8, trees beginning 32' from DER, 114' right of centerline, up to 100' AGL/469' MSL.
Buildings beginning 162' from DER, 152' left of centerline, up to 25' AGL/384' MSL.
Rwy 26, trees beginning 31' from DER, 97' left and 119' right of centerline, up to 100' AGL/459' MSL.

CAMBRIDGE, MD

CAMBRIDGE-DORCHESTER RGNL (CGE)

TAKEOFF MINIMUMS AND (OBSTACLE) DEPARTURE PROCEDURES

AMDT 2 21JUL16 (16203) (FAA)

TAKEOFF OBSTACLE NOTES:

Rwy 16, railroad 81' from DER, 375' right of centerline, 40' MSL.
Road 224' from DER, 397' right of centerline, 33' MSL.
Tree 1558' from DER, 546' left of centerline, 102' MSL.
Tree 1923' from DER, 298' left of centerline, 89' MSL.
Tree 1993' from DER, 380' left of centerline, 92' MSL.
Tree 2062' from DER, 575' left of centerline, 96' MSL.
Rwy 34, tree 331' from DER, 534' left of centerline, 73' MSL.
Pole 637' from DER, 323' left of centerline, 37' AGL/55' MSL.
Tree 861' from DER, 329' left of centerline, 97' MSL.
Tree 892' from DER, 340' left of centerline, 104' MSL.
Tree 953' from DER, 755' right of centerline, 98' MSL.
Tree 1151' from DER, 713' right of centerline, 113' MSL.
Tree 1286' from DER, 599' left of centerline, 106' MSL.
Tree 1517' from DER, 401' right of centerline, 97' MSL.
Tree 1981' from DER, 277' left of centerline, 124' MSL.
Tree 2178' from DER, 658' left of centerline, 116' MSL.
Tree 2824' from DER, 9' left of centerline, 98' MSL.
Tree 3106' from DER, 362' left of centerline, 108' MSL.
Tree 3178' from DER, 512' right of centerline, 103' MSL.
Tree 3204' from DER, 516' right of centerline, 109' MSL.

CAMP PEARY LNDG STRIP (KW94)

WILLIAMSBURG, VA

TAKEOFF MINIMUMS AND (OBSTACLE) DEPARTURE PROCEDURES

AMDT 1 15JUN23 (23166) (USA)

TAKEOFF OBSTACLE NOTES:

Rwy 5, bldg 678' from DER, 333' left of centerline, 28' AGL/58' MSL.
Trees, multiple trnsmsn lines 120' from DER, 184' left of centerline, up to 95' AGL/126' MSL.
Trees, multiple trnsmsn lines 162' from DER, 257' right of centerline, up to 100' AGL/132' MSL.
Rwy 23, trees, multiple trnsmsn lines 1891' from DER, 69' left of centerline, up to 95' AGL/136' MSL.
Multiple trees, trnsmsn lines 537' from DER, 437' right of centerline, up to 110' AGL/151' MSL.
Pylon 385' from DER, 597' right of centerline, 42' AGL/77' MSL.
Pylon 354' from DER, 581' right of centerline, 28' AGL/76' MSL.
Pylon 413' from DER, 523' right of centerline, 31' AGL/75' MSL.

CHARLOTTESVILLE, VA

CHARLOTTESVILLE-ALBEMARLE (CHO)

TAKEOFF MINIMUMS AND (OBSTACLE) DEPARTURE PROCEDURES

AMDT 10 22AUG13 (13234) (FAA)

TAKEOFF MINIMUMS:

Rwy 3, std. w/min. climb of 342' per NM to 1500, or 1200-2½ for climb in visual conditions.

DEPARTURE PROCEDURE:

Rwy 3, climb on heading 030° to 1500 then climbing right turn direct GVE VORTAC before proceeding on course. For climb in visual conditions: cross Charlottesville-Albemarle airport at or above 1700 then proceed direct GVE VORTAC before proceeding on course. When executing VCOA, notify ATC prior to departure.

Rwy 21, climb on heading 210° to 1400 then climbing left turn direct GVE VORTAC before proceeding on course.

TAKEOFF OBSTACLE NOTES:

Rwy 3, trees beginning 183' from DER, left and right of centerline, up to 100' AGL/684' MSL.

Rwy 21, vehicles on road, 32' from DER, 496' right of centerline, up to 17' AGL/667' MSL.

Light support structures, 1178' from DER, 778' right of centerline, 62' AGL/670' MSL.

CHASE CITY, VA

CHASE CITY MUNI (CXE)

TAKEOFF MINIMUMS AND (OBSTACLE) DEPARTURE PROCEDURES

ORIG 27SEP07 (07270) (FAA)

TAKEOFF OBSTACLE NOTES:

Rwy 18, trees beginning 191' from DER, 116' left of centerline, up to 100' AGL/609' MSL.

Multiple trees beginning 327' from DER, 133' right of centerline, up to 100' AGL/599' MSL.

Rwy 36, trees beginning 164' from DER, 154' right of centerline, up to 100' AGL/649' MSL.

Trees beginning 470' from DER, 124' left of centerline, up to 100' AGL/649' MSL.

CHURCHVILLE, MD

HARFORD COUNTY (0W3)

TAKEOFF MINIMUMS AND (OBSTACLE) DEPARTURE PROCEDURES

AMDT 1A 05NOV20 (20310) (FAA)

TAKEOFF MINIMUMS:

Rwys 1, 19, NA - Environmental.

Rwy 10, 300-2 or std. w/ min. climb of 210' per NM to 800, or alternatively, with std. takeoff minimums and a normal 200' per NM climb gradient, takeoff must occur no later than 1500' prior to DER.

TAKEOFF OBSTACLE NOTES:

Rwy 28, trees beginning 665' from DER, left and right of centerline, up to 100' AGL/516' MSL.

Rwy 10, vehicles on road beginning 328' from DER, left and right of centerline, up to 17' AGL/416' MSL.

Trees beginning 690' from DER, 271' left of centerline, up to 100' AGL/499' MSL.

Trees beginning 2226' from DER, 454' right of centerline, up to 100' AGL/519' MSL.

Rising terrain beginning 1.6 NM from DER, 2510' left of centerline, up to 639' MSL.

CLARKSVILLE, VA

LAKE COUNTRY RGNL (W63)

TAKEOFF MINIMUMS AND (OBSTACLE) DEPARTURE PROCEDURES

AMDT 1 08APR10 (10098) (FAA)

TAKEOFF OBSTACLE NOTES:

Rwy 4, trees beginning 5' from DER, 438' left of centerline, up to 100' AGL/539' MSL.

Building 27' from DER, 94' right of centerline, 20' AGL/449' MSL.

Vehicles on road beginning 200' from DER, from left to right of centerline, up to 15' AGL/444' MSL.

Warehouse 313' from DER, on centerline, 75' AGL/495' MSL.

Building 385' from DER, 257' right of centerline, 20' AGL/439' MSL.

Trees beginning 444' from DER, 518' right of centerline, up to 100' AGL/509' MSL.

Rwy 22, trees beginning 3' from DER from 452' left of centerline to 547' right of centerline, up to 100' AGL/422' MSL.

Trees beginning 1624' from DER, from 632' left of centerline to 535' right of centerline, up to 100' AGL/485' MSL.

22 FEB 2024 to 21 MAR 2024
22 FEB 2024 to 21 MAR 2024

COLLEGE PARK, MD

COLLEGE PARK (CGS)

TAKEOFF MINIMUMS AND (OBSTACLE) DEPARTURE PROCEDURES

AMDT 4 25FEB21 (21056) (FAA)

TAKEOFF MINIMUMS:

Rwy 15, 400-3 w/ min. climb of 270' per NM to 700 or 1100-3 for VCOA.

Rwy 33, std. w/ min. climb of 456' per NM to 400 or 1100-3 for VCOA.

DEPARTURE PROCEDURE:

Rwy 33, climb on heading 329° to 700 before proceeding on course.

VCOA:

Rwys 15, 33, obtain ATC approval for VCOA when requesting IFR clearance. Climb in visual conditions to cross College Park Airport at or above 1000 before proceeding on course.

TAKEOFF OBSTACLE NOTES:

Rwy 15, trees beginning 113' from DER, 236' right of centerline, up to 100' AGL/149' MSL.
Trees beginning 227' from DER, 215' left of centerline, up to 100' AGL/159' MSL.
Trees beginning 567' from DER, 260' left of centerline, up to 100' AGL/239' MSL.
Tree 3593' from DER, 896' left of centerline, 100' AGL/249' MSL.
Trees beginning 3709' from DER, 695' left of centerline, up to 100' AGL/259' MSL.
Trees beginning 3800' from DER, 1259' right of centerline, up to100' AGL/209' MSL.
Tree 4257' from DER, 1502' right of centerline, 100' AGL/249' MSL.
Tree 4320' from DER, 1561' left of centerline, 100' AGL/279' MSL.
Tree 4403' from DER, 1665' right of centerline, 100' AGL/269' MSL.
Trees beginning 1.6 NM from DER, 2070' left of centerline, up to 200' AGL/409' MSL.
Tree 1.6 NM from DER, 2208' left of centerline, 200' AGL/429' MSL.
Tree 1.6 NM from DER, 325' right of centerline, 200' AGL/399' MSL.
Tree beginning 1.7 NM from DER, 338' right of centerline, up to 200' AGL/429' MSL.
Tree 2.4 NM from DER, 3426' left of centerline, 200' AGL/409' MSL.

Rwy 33, tree 287' from DER, 212' right of centerline, 100' AGL/169' MSL.
Tree 334' from DER, 329' left of centerline, 100' AGL/159' MSL.
Building beginning 905' from DER, 300' left of centerline, up to 100' AGL/169' MSL.
Tree 2688' from DER, 1129' right of centerline, 100' AGL/189' MSL.
Tree 2709' from DER, 1202' right of centerline, 100' AGL/199' MSL.
Tree 2820' from DER, 1232' right of centerline, 100' AGL/209' MSL.
Building 3025' from DER, 1095' left of centerline, 126' AGL/198' MSL.
Building beginning 3314' from DER, 621' right of centerline, up to 100' AGL/219' MSL.
Building beginning 3513' from DER, 834' right of centerline, up to 100' AGL/229' MSL.
Building 4251' from DER, 329' right of centerline, 166' AGL/236' MSL.
Building 4714' from DER, 495' left of centerline, 137' AGL/201' MSL.
Trees beginning 5533' from DER, 798' left of centerline, up to 100' AGL/293' MSL.
Trees beginning 1.2 NM from DER, 817' left of centerline, up to 100' AGL/299' MSL.
Trees beginning 1.6 NM from DER, 346' left of centerline, up to 200' AGL/399' MSL.
Tree 1.7 NM from DER, 1852' left of centerline, 200' AGL/400' MSL.
Tower beginning 1.8 NM from DER, 705' left of centerline, up to 200' AGL/409' MSL.
Tree 2.2 NM from DER, 1692' right of centerline, 200' AGL/439' MSL.
Trees beginning 2.4 NM from DER, 773' left of centerline, up to 200' AGL/479' MSL.
Tree 2.5 NM from DER, 132' left of centerline, 200' AGL/449' MSL.

22 FEB 2024 to 21 MAR 2024
22 FEB 2024 to 21 MAR 2024

CREWE, VA

CREWE MUNI (W81)

TAKEOFF MINIMUMS AND (OBSTACLE) DEPARTURE PROCEDURES

ORIG 13JAN11 (11013) (FAA)

TAKEOFF OBSTACLE NOTES:

Rwy 15, trees beginning 140' from DER, 464' left of centerline, up to 100' AGL/449' MSL.
Trees beginning 406' from DER, 448' right of centerline, up to 100' AGL/509' MSL.

Rwy 33, trees beginning 985' from DER, 587' left of centerline, up to 100' AGL/539' MSL.
Trees beginning 520' from DER, 513' right of centerline, up to 100' AGL/529' MSL.

CRISFIELD, MD

CRISFIELD-SOMERSET COUNTY AIRPORT (W41)

TAKEOFF MINIMUMS AND (OBSTACLE) DEPARTURE PROCEDURES

ORIG-A 20AUG15 (15232) (FAA)

TAKEOFF MINIMUMS:

Rwys 6, 24, NA-obstacles

DEPARTURE PROCEDURE:

Rwy 14, climb via heading 142° to 900 before proceeding on course.

Rwy 32, climb via heading 322° to 900 before proceeding on course.

CULPEPER, VA

CULPEPER RGNL (CJR)

TAKEOFF MINIMUMS AND (OBSTACLE) DEPARTURE PROCEDURES

ORIG 20DEC07 (07354) (FAA)

DEPARTURE PROCEDURE:

Rwy 22, climb heading 218° to 1000 before turning right.

TAKEOFF OBSTACLE NOTES:

Rwy 4, tree 79' from DER, 418' left of centerline 86' AGL/337' MSL.
Vehicle on road 207' from DER, 367' left of centerline, 15' AGL/330' MSL.
Tree 3396' from DER, 514' right of centerline, 91' AGL/410' MSL.
Rwy 22, tree 128' from DER, 332' left of centerline, 25' AGL/334' MSL.
Multiple trees beginning 272' from DER, 179' right of centerline up to 22' AGL/341' MSL.
Pole 1480' from DER, 68' left of centerline, 27' AGL/356' MSL.

CUMBERLAND, MD

GREATER CUMBERLAND RGNL (CBE)

TAKEOFF MINIMUMS AND (OBSTACLE) DEPARTURE PROCEDURES

AMDT 7 31MAR16 (16091) (FAA)

TAKEOFF MINIMUMS:

Rwy 11, 29, NA - obstacles.
Rwy 5, 700-3 w/min. climb of 310' per NM to 3200 or std. w/min. climb of 370' per NM to 2600 or 2500-3 for climb in visual conditions.
Rwy 23, 1000-3 w/min. climb of 480' per NM to 2000 or std. w/min. climb of 925' per NM to 1900 or 2500-3 for climb in visual conditions.

DEPARTURE PROCEDURE:

Rwy 5, climb heading 049° to 2900 before proceeding on course..
Rwy 23, climb heading 214° to 3400 before proceeding on course.

VCOA:

Obtain ATC approval for climb in visual conditions when requesting IFR clearance. Climb in visual conditions to cross Greater Cumberland Rgnl Airport at or above 3100 before proceeding on course.

TAKEOFF OBSTACLE NOTES:

Rwy 5, trees beginning 146' from DER, 388' left of centerline, up to 50' AGL/798' MSL.
Trees beginning 511' from DER, 466' right of centerline, up to 48' AGL/821' MSL.
Trees 2.3 NM from DER, 4178' right of centerline, up to 100' AGL/1439' MSL.
Rwy 23, NAVAID 169' from DER, 269' left of centerline, 22' AGL/732' MSL.
Trees 53' from DER, 497' right of centerline, up to 42' AGL/751' MSL.
Trees beginning 1188' from DER, 422' right of centerline, up to 67' AGL/836' MSL.
Tower 2029' from DER, 757' right of centerline, 99' AGL/958' MSL.
Trees 2.4 NM from DER, 729' right of centerline, up to 100' AGL/1679' MSL.

DANVILLE, VA

DANVILLE RGNL (DAN)

TAKEOFF MINIMUMS AND (OBSTACLE) DEPARTURE PROCEDURES

AMDT 2A 28APR16 (16119) (FAA)

TAKEOFF MINIMUMS:

Rwy 13, 300-1¼ or std. w/ min. climb of 232' per NM to 800.

TAKEOFF OBSTACLE NOTES:

Rwy 2, trees beginning 285' from DER, 455' right of centerline, up to 22' AGL/587' MSL.
Rwy 20, tree 1328' from DER, 633' right of centerline, 30' AGL/569' MSL.
Rwy 13, trees beginning 189' from DER, 90' right of centerline, up to 100' AGL/711' MSL.
Building 1310' from DER, 194' right of centerline, 10' AGL/562' MSL.
Pole 1496' from DER, 277' right of centerline, 29' AGL/590' MSL.
Trees beginning at DER, 8' left of centerline, up to 74' AGL/613' MSL.
Rwy 31, Trees beginning 823' from DER, 6' left of centerline, up to 85' AGL/699' MSL.
Pole 1185' from DER, 253' left of centerline, 30' AGL/608' MSL.
Pole 2056' from DER, 253 left of centerline, 38' AGL/626' MSL.
Sign 2196' from DER, 328' left of centerline, 36' AGL/628' MSL.
Tower 1165' from DER, 416' left of centerline, 64' AGL/641' MSL.
Building 568' from DER, 455' left of centerline, 37' AGL/612' MSL.
Building 395' from DER, 573' left of centerline, 28' AGL/602' MSL.
Trees beginning 1358' from DER. 24' right of centerline, up to 73' AGL/700' MSL.
Pole 1540' from DER, 111' right of centerline, 44' AGL/613' MSL.
Pole 1365' from DER, 131' right of centerline, 32' AGL/606' MSL.
Pole 3042' from DER, 174' right of centerline, 75' AGL/681' MSL.
Pole 2897' from DER, 284' right of centerline, 75' AGL/682' MSL.
Building 2308' from DER, 584' right of centerline, 40' AGL/647' MSL.
Sign 1839' from DER, 104' right of centerline, 30' AGL/636' MSL.

DAVISON AAF (KDAA)
FORT BELVOIR, VA
TAKEOFF MINIMUMS AND (OBSTACLE) DEPARTURE PROCEDURES
AMDT 2 07SEP23 (23250) (USA)
TAKEOFF MINIMUMS:
Rwy 14, 300-1½.
Rwy 32, 400-3, or std w/min climb of 360'/NM to 600.
TAKEOFF OBSTACLE NOTES:
Rwy 14, terrain 1.2 NM from DER, 1996' left of centerline, 261' MSL.
Terrain 2334' from DER, 1034' right of centerline, 138' MSL.
Rwy 32, pole 2090' from DER, 741' right of centerline, 35' AGL/132' MSL.
Twr 2090' from DER, 741' right of centerline, 35' AGL/132' MSL.
Bldg 139' from DER, 520' right of centerline, 28' AGL/75' MSL.
Bldg 167' from DER, 521' right of centerline, 31' AGL/75' MSL.

DOVER AFB (KDOV)
DOVER, DE
TAKEOFF MINIMUMS AND (OBSTACLE) DEPARTURE PROCEDURES
28MAR19 (19087)
TAKEOFF OBSTACLE NOTES:
Rwy 1, possible C-5 aircraft/vehicles positioned in the DER, hammerhead just left of rwy cntrln, up to 65' AGL/89' MSL.
Rwy 14, no obstacles penetrate the obstacle departure surface.
Rwy 19, possible C-5 aircraft/vehicles positioned in the DER, hammerhead just right of rwy cntrln, up to 65' AGL/92' MSL.
Rwy 32, building 945 3739' from DER, 614' left of cntrln, 67' AGL/113' MSL.
Multiple C-5s parked on ramp beginning 2047' thru 2529' from DER, 1010' left of cntrln, up to 65' AGL/92' MSL.
Possible large aircraft 2800' from DER, on Twy G just left of cntrln, up to 65' AGL/98' MSL.
Possible taxiing C-5 1091' from DER, 744' left of cntrln, 65' AGL/88' MSL.
Pylon 4876' from DER, 1755' left of cntrln, 85' AGL/120' MSL.
Pylon 5078' from DER, 724' left of cntrln, 85' AGL/124' MSL.

DOVER/CHESWOLD, DE
DELAWARE AIRPARK (33N)
TAKEOFF MINIMUMS AND (OBSTACLE) DEPARTURE PROCEDURES
ORIG 12OCT17 (17285) (FAA)
TAKEOFF OBSTACLE NOTES:
Rwy 9, terrain 13' from DER, 56' right of centerline, 48' MSL.
Tree 65' from DER, 306' left of centerline, 95' AGL/132' MSL.
Tree 74' from DER, 310' right of centerline, 59' MSL.
Trees beginning 83' from DER, 333' left of centerline, up to 97' AGL/134' MSL.
Tree, traverse way, transmission line, poles beginning 131' from DER, 8' right of centerline, up to 125' MSL.
Trees, poles, transmission line beginning 356' from DER, 2' left of centerline, up to 103' AGL/138' MSL.
Trees beginning 2106' from DER, 12' left of centerline, up to 151' MSL.
Trees beginning 2285' from DER, 405' right of centerline, up to 132' MSL.
Trees, tower beginning 2320' from DER, 23' right of centerline, up to 101' AGL/133' MSL.
Rwy 27, vertical structure 14' from DER, 67' right of centerline, 5' AGL/50' MSL.
Tree 19' from DER, 314' right of centerline, 105' MSL.
Tree 37' from DER, 413' left of centerline, 72' MSL.
Trees beginning 104' from DER, 353' right of centerline, up to 130' MSL.
Tree 134' from DER, 315' left of centerline, 74' MSL.
Trees beginning 188' from DER, 303' left of centerline, up to 94' MSL.
Tree 417' from DER, 494' right of centerline, 149' MSL.
Trees beginning 418' from DER, 552' left of centerline, up to 96' MSL.
Trees beginning 420' from DER, 414' right of centerline, up to 108' AGL/154' MSL.
Tree 611' from DER, 653' left of centerline, 141' MSL.
Trees beginning 667' from DER, 19' left of centerline, up to 150' MSL.
Trees beginning 884' from DER, 8' right of centerline, up to 161' MSL.
Trees beginning 2360' from DER, 50' left of centerline, up to 102' AGL/151' MSL.
Trees beginning 2500' from DER, 6' left of centerline, up to 105' AGL/155' MSL.
Trees beginning 2634' from DER, 42' left of centerline, up to 161' MSL.
Trees beginning 2697' from DER, 15' left of centerline, up to 106' AGL/163' MSL.
Trees beginning 2972' from DER, 24' right of centerline, up to 113' AGL/165' MSL.

22 FEB 2024 to 21 MAR 2024
22 FEB 2024 to 21 MAR 2024

DUBLIN, VA

NEW RIVER VALLEY (PSK)

TAKEOFF MINIMUMS AND (OBSTACLE) DEPARTURE PROCEDURES

AMDT 2 12MAR09 (09071) (FAA)

TAKEOFF MINIMUMS:

Rwy 24, 200-1½ or std. w/min. climb of 310' per NM to 2400.

DEPARTURE PROCEDURE:

Rwy 6, climbing right turn heading 150° to intercept PSK VORTAC R-120 outbound to 5200 before proceeding on course.

Rwy 24, climb heading 238° to 4000 before proceeding on course.

TAKEOFF OBSTACLE NOTES:

Rwy 6, tree 321' from DER, 493' left of centerline, 100' AGL/2112' MSL.
Terrain 122' from DER, 460' left of centerline, up to 2105' MSL.
Rwy 24, pole 1223' from DER, 671' right of centerline, 42' AGL/2161' MSL.
Pole 669' from DER, 558' right of centerline, 18' AGL/2137' MSL.
Pole 4851' from DER, 1170' left of centerline, 32' AGL/2231' MSL.
Tower 5078' from DER 1017' left of centerline, 101' AGL/2300' MSL.
Trees 226' from DER, 271' left of centerline, up to 103' AGL/2302' MSL.
Terrain 68' from DER, 281' right of centerline, up to 2116' MSL.

EASTON, MD

EASTON/NEWNAM FLD (ESN)

TAKEOFF MINIMUMS AND (OBSTACLE) DEPARTURE PROCEDURES

AMDT 1 05MAR15 (21112) (FAA)

TAKEOFF MINIMUMS:

Rwy 22, 300-2 or std. w/min. climb of 245' per NM to 500.

TAKEOFF OBSTACLE NOTES:

Rwy 4, pole and vehicles on road beginning 199' from DER, 278' right of centerline, up to 21' AGL/91' MSL.
Poles beginning 834' from DER, 27' right of centerline, up to 34' AGL/100' MSL.
Trees beginning 1508' from DER, 38' left of centerline, up to 37' AGL/116' MSL.
Trees beginning 1484' from DER, 45' right of centerline, up to 54' AGL/133' MSL.
Rwy 15, fence 2' from DER, 410' left of centerline, 8' AGL/57' MSL.
Poles beginning 720' from DER, 331' left of centerline, up to 36' AGL/92' MSL.
Trees beginning 861' from DER, 621' left of centerline, up to 89' AGL/148' MSL.
Poles and trees beginning 827' from DER, 514' right of centerline, up to 57' AGL/116' MSL.
Trees beginning 1924' from DER, 237' right of centerline, up to 94' AGL/153' MSL.
Pole and trees beginning 2017' from DER, 182' left of centerline, up to 89' AGL/148' MSL.
Rwy 22, trees 1250' from DER, 785' right of centerline, up to 56' AGL/95' MSL.
Trees beginning 1322' from DER, 759' left of centerline, up to 90' AGL/129' MSL.
Tower 1.6 NM from DER, 2374' left of centerline, 276' AGL/290' MSL.
Rwy 33, vehicles on road and trees beginning 9' from DER, 405' right of centerline, up to 49' AGL/88' MSL.
Pole 887' from DER, 409' left of centerline, 34' AGL/58' MSL.
Trees 1497' from DER, 19' right of centerline, up to 48' AGL/87' MSL.
Trees beginning 1884' from DER, 209' right of centerline, up to 99' AGL/158' MSL.
Trees 2889' from DER, 682' left of centerline, up to 69' AGL/118' MSL.

ELKTON, MD

CLAREMONT (58M)

TAKEOFF MINIMUMS AND (OBSTACLE) DEPARTURE PROCEDURES

AMDT 1 08JAN15 (15008) (FAA)

TAKEOFF MINIMUMS:

Rwy 31, 600-2¼ or std. w/min. climb of 360' per NM to 900.

DEPARTURE PROCEDURE:

Rwy 31, climb heading 308° to 900 before turning left.

TAKEOFF OBSTACLE NOTES:

Rwy 13, poles beginning 9' from DER, 39' left of centerline, up to 30' AGL/95' MSL.
Trees beginning 22' from DER, 55' left of centerline, up to 47' AGL/107' MSL.
Trees beginning 154' from DER, 145' left of centerline, up to 93' AGL/153' MSL.
Trees beginning 389' from DER, 14' left of centerline, up to 117' AGL/177' MSL.
Trees beginning 873' from DER, 56' left of centerline, up to 107' AGL/157' MSL.
Poles beginning 37' from DER, 21' right of centerline, up to 36' AGL/86' MSL.
Trees beginning 119' from DER, 34' right of centerline, up to 83' AGL/143' MSL.
Trees beginning 470' from DER, 33' right of centerline, up to 83' AGL/153' MSL.
Tires beginning 1379' from DER, 59' right of centerline, up to 92' AGL/142' MSL.
Rwy 31, trees beginning 2' from DER, 231' left of centerline, up to 84' AGL/184' MSL.
Trees beginning 177' from DER, 152' left of centerline, up to 101' AGL/201' MSL.
Trees beginning 655' from DER, 8' left of centerline, up to 99' AGL/199' MSL.
Trees beginning 2214' from DER, 10' left of centerline, up to 109' AGL/189' MSL.
Antenna 1.9 NM from DER, 3436' left of centerline, 345' AGL/620' MSL.
Terrain beginning 6' from DER. 67' right of centerline, 117' MSL.
Trees beginning 256' from DER, 81' right of centerline, up to 60' AGL/170' MSL.
Trees beginning 776' from DER, 23' right of centerline, up to 91' AGL/201' MSL.
Trees beginning 1965' from DER, 15' right of centerline, up to 81' AGL/261' MSL.

EMPORIA, VA

EMPORIA-GREENSVILLE RGNL (EMV)

TAKEOFF MINIMUMS AND (OBSTACLE) DEPARTURE PROCEDURES

ORIG-A 03APR14 (14093) (FAA)

TAKEOFF OBSTACLE NOTES:

Rwy 16, trees beginning 188' from DER, 433' left of centerline, up to 42' AGL/141' MSL.
Rwy 34, trees beginning 56' from DER, 489' right of centerline, up to 75' AGL/204' MSL.
Trees beginning 2290' from DER, 250' right of centerline, up to 111' AGL/230' MSL.
Trees beginning 2131' from DER, 106' left of centerline, up to 101' AGL/220' MSL.
Trees beginning 1276' from DER, 459' left of centerline, up to 66' AGL/195' MSL.
Trees beginning 1889' from DER, 9' right of centerline, up to 75' AGL/204' MSL.
Trees beginning 1804' from DER, 136' left of centerline, up to 60' AGL/189' MSL.
Trees beginning 1982' from DER, 83' left of centerline, up to 60' AGL/189' MSL.
Trees beginning 571' from DER, 5' right of centerline, up to 23' AGL/152' MSL.
Trees beginning 565' from DER, 57' left of centerline, up to 14' AGL/143' MSL.
Trees beginning 3423' from DER, 256' left of centerline, up to 105' AGL/214' MSL.
Trees beginning 3444' from DER, 140' left of centerline, up to 105' AGL/214' MSL.
Trees beginning 3508' from DER, 44' right of centerline, up to 105' AGL/214' MSL.

FARMVILLE, VA

FARMVILLE RGNL (FVX)

TAKEOFF MINIMUMS AND (OBSTACLE) DEPARTURE PROCEDURES

AMDT 1A 15SEP16 (16259) (FAA)

TAKEOFF OBSTACLE NOTES:

Rwy 3, tree 35' from DER, 406' right of centerline, 436' MSL.
Trees beginning 56' from DER, 403' right of centerline, up to 437' MSL.
Trees beginning 56' from DER, 334' left of centerline, up to 491' MSL.
Trees beginning 66' from DER, 295' left of centerline, up to 496' MSL.
Trees beginning 148' from DER, 332' right of centerline, up to 440' MSL.
Tree 453' from DER, 561' right of centerline, 456' MSL.
Trees beginning 460' from DER, 409' right of centerline, up to 459' MSL.
Trees beginning 518' from DER, 414' right of centerline, up to 467' MSL.
Trees beginning 623' from DER, 413' right of centerline, up to 468' MSL.
Trees beginning 647' from DER, 504' right of centerline, up to 476' MSL.
Trees beginning 661' from DER, 452' right of centerline, up to 480' MSL.
Trees beginning 752' from DER, 402' right of centerline, up to 495' MSL.
Trees beginning 757' from DER, 402' right of centerline, up to 498' MSL.
Trees beginning 837' from DER, 398' right of centerline, up to 502' MSL.
Trees beginning 994' from DER, 295' left of centerline, up to 506' MSL.
Trees beginning 1136' from DER, 153' left of centerline, up to 513' MSL.
Rwy 21, terrain and tree beginning abeam DER, 90' right of centerline, up to 471' MSL.
Vehicles on road beginning 2' from DER, 475' left of centerline, up to 413' MSL.
Vehicles on road beginning 22' from DER, 475' left of centerline, up to 414' MSL.
Vehicles on road beginning 116' from DER, 475' left of centerline, up to 415' MSL.
Terrain and vehicles on road beginning 163' from DER, 213' left of centerline, up to 416' MSL.
Terrain, pole, and vehicles on road beginning 199' from DER, 14' left of centerline, up to 26' AGL/429' MSL.
Trees beginning 298' from DER, 427' right of centerline, up to 478' MSL.
Trees beginning 399' from DER, 480' right of centerline, up to 479' MSL.
Tree 450' from DER, 496' right of centerline, 480' MSL.
Trees beginning 482' from DER, 454' right of centerline, up to 483' MSL.
Pole and vehicles on road beginning 506' from DER, 475' left of centerline, up to 30' AGL/438' MSL.
Tree 538' from DER, 539' left of centerline, 471' MSL.
Tree, pole, and vehicles on road beginning 553' from DER, 21' left of centerline, up to 474' MSL.
Tree and fence beginning 570' from DER, 5' right of centerline, up to 489' MSL.
Trees beginning 1798' from DER, 59' left of centerline, up to 475' MSL.
Tree 2118' from DER, 476' left of centerline, 479' MSL.
Trees beginning 2127' from DER, 258' left of centerline, up to 482' MSL.
Trees beginning 2363' from DER, 379' left of centerline, up to 483' MSL.
Trees beginning 2465' from DER, 436' left of centerline, up to 491' MSL.

FOREST, VA

NEW LONDON (W90)

TAKEOFF MINIMUMS AND (OBSTACLE) DEPARTURE PROCEDURES

ORIG 31MAY12 (12152) (FAA)

TAKEOFF MINIMUMS:

Rwy 18, 300-1 or std. w/min. climb of 511' per NM to 1000.

DEPARTURE PROCEDURE:

Rwy 18, climb heading 176° to 2200 before proceeding on course.
Rwy 36, climbing right turn heading 066° and on LYH R-005 outbound to 3500 before proceeding on course.

TAKEOFF OBSTACLE NOTES:

Rwy 18, trees beginning at DER, left and right of centerline, up to 100' AGL/ 919' MSL.
Rwy 36, trees beginning at DER, left and right of centerline, up to 100' AGL/979' MSL.
Vehicle on roadway, 19' from DER, 186' left of centerline, up to 15' AGL/ 894' MSL.

FORT MEADE (ODENTON), MD

TIPTON (FME)

TAKEOFF MINIMUMS AND (OBSTACLE) DEPARTURE PROCEDURES

ORIG 21FEB02 (02052) (FAA)

TAKEOFF OBSTACLE NOTES:

Rwy 10, cross DER at or above 17' AGL/167' MSL.
Trees 1052' right of DER, 88' AGL/238' MSL.

FRANKLIN, VA

FRANKLIN RGNL (FKN)

TAKEOFF MINIMUMS AND (OBSTACLE) DEPARTURE PROCEDURES

AMDT 2B 05DEC19 (19339) (FAA)

TAKEOFF OBSTACLE NOTES:

Rwy 9, tree 159' from DER, 306' right of centerline, 69' MSL.
Tree 233' from DER, 315' right of centerline, 73' MSL.
Trees beginning 235' from DER, 386' right of centerline, up to 96' MSL.
Tree and vehicle on road beginning 432' from DER, 191' right of centerline, up to 102' MSL.
Trees beginning 944' from DER, 621' left of centerline, up to 106' MSL.
Trees beginning 1191' from DER, 594' left of centerline, up to 109' MSL.
Trees beginning 1279' from DER, 79' left of centerline, up to 117' MSL.
Trees beginning 1877' from DER, 178' right of centerline, up to 118' MSL.
Tree 2341' from DER, 770' right of centerline, 128' MSL.
Trees beginning 2386' from DER, 931' right of centerline, up to 139' MSL.
Trees beginning 2523' from DER, 312' right of centerline, up to 144' MSL.
Trees beginning 3122' from DER, 901' right of centerline, up to 149' MSL.
Trees beginning 3203' from DER, 415' right of centerline, up to 151' MSL.
Trees beginning 3484' from DER, 107' right of centerline, up to 159' MSL.
Tree 3573' from DER, 20' left of centerline, 131' MSL.
Tree 4245' from DER, 157' left of centerline, 149' MSL.
Rwy 27, trees beginning abeam DER, 362' left of centerline, up to 119' MSL.
Trees beginning 211' from DER, 121' right of centerline, up to 55' MSL.
Pole and tree beginning 559' from DER, 470' right of centerline, up to 33' AGL/63' MSL.
Pole 596' from DER, 299' right of centerline, 43' AGL/68' MSL.
Trees beginning 606' from DER, 298' right of centerline, up to 71' MSL.
Tree 946' from DER, 550' right of centerline, 96' MSL.
Trees beginning 997' from DER, 593 ' right of centerline, up to 107' MSL.
Trees beginning 1017' from DER, 24' right of centerline, up to 109' MSL.

FREDERICK, MD

FREDERICK MUNI (FDK)

TAKEOFF MINIMUMS AND (OBSTACLE) DEPARTURE PROCEDURES

AMDT 4A 30JAN20 (20030) (FAA)

TAKEOFF MINIMUMS:

Rwy 5, 300-2 or std. w/min. climb of 260' per NM to 600.
Rwy 12, 500-2¾ or std. w/min. climb of 410' per NM to 800.
Rwy 30, std. w/min. climb of 285' per NM to 900 or 1500-2½ for climb in visual conditions.

DEPARTURE PROCEDURE:

Rwy 5, climbing left turn heading 340° and on FDK VOR R-010 to 2100 before proceeding on course.
Rwy 12, climb heading 124° to 900 before proceeding westbound.
Rwy 23, climb heading 229° to 1200 before turning right.
Rwy 30, climbing right turn heading 040° and on FDK R-010 to 2400 before proceeding on course.

VCOA:

Rwy 30, obtain ATC approval for climb in visual conditions when requesting IFR clearance. Climb in visual conditions to cross Frederick Muni airport at or above 1700 before proceeding on course.

TAKEOFF OBSTACLE NOTES:

Rwy 5, light and sign beginning 44' from DER, 123' left of centerline, up to 3' AGL/286' MSL.
Trees beginning 1467' from DER, 630' right of centerline, up to 90' AGL/389' MSL.
Trees beginning 2645' from DER, 610' left of centerline, up to 75' AGL/394' MSL.
Trees beginning 4525' from DER, 597' left of centerline, up to 75' AGL/434' MSL.
Elevator and trees beginning 4824' from DER, 341' right of centerline, up to 76' AGL/435' MSL.
Trees 1.2 NM from DER, 1562' right of centerline, up to 95' AGL/514' MSL.
Trees 1.4 NM from DER, 936' right of centerline, up to 89' AGL/508' MSL.
Rwy 12, wall and trees beginning 45' from DER, 283' right of centerline, up to 14' AGL/308' MSL.
Trees beginning 1312' from DER, 228' left of centerline, up to 82' AGL/391' MSL.
Trees beginning 1667' from DER, 75' right of centerline, up to 83' AGL/362' MSL.
Building and trees beginning 3292' from DER, 45' left of centerline, up to 113' AGL/552' MSL.
Tower, pole, grain silos, and trees beginning 3365' from DER, 41' from DER, up to 101' AGL/520' MSL.
Trees 2.1 NM from DER, 1377' left of centerline, up to 90' AGL/779' MSL.
Trees 2.3 NM from DER, 2711' left of centerline, up to 107' AGL/636' MSL.
Rwy 23, vehicles on road and trees beginning 134' from DER, 376' right of centerline, up to 21' AGL/327' MSL.
Pole, buildings, and trees beginning 737' from DER, 286' right of centerline, up to 47' AGL/362' MSL.
Poles and trees beginning 1477' from DER, 41' left of centerline, up to 72' AGL/411' MSL.
Trees beginning 1701' from DER, 55' right of centerline, up to 78' AGL/397' MSL.

CON'T

22 FEB 2024 to 21 MAR 2024
22 FEB 2024 to 21 MAR 2024

FREDERICK, MD (CON'T)

FREDERICK MUNI (FDK) (CON'T)

Rwy 30, poles and trees beginning 4' from DER, 320' right of centerline, up to 22' AGL/316' MSL.
Antenna on building and trees beginning 1255' from DER, 750' left of centerline, up to 56' AGL/335' MSL.
Trees beginning 1096' from DER, 351' right of centerline, up to 77' AGL/336' MSL.
Trees 1962' from DER, 105' right of centerline, up to 77' AGL/356' MSL.

FREDERICKSBURG, VA

SHANNON (EZF)

TAKEOFF MINIMUMS AND (OBSTACLE) DEPARTURE PROCEDURES

AMDT 1 10MAR11 (11069) (FAA)

TAKEOFF MINIMUMS:
Rwys 15,33, NA- Environmental.
Rwy 6, 300-2¼ or std. w/min. climb of 270' per NM to 500.
Rwy 24, 400-3 or std. with a min. climb of 380' per NM to 600.

DEPARTURE PROCEDURE:
Rwy 6, climb heading 055° to 700 before turning left.
Rwy 24, climb heading 235° to 700 before turning right.

TAKEOFF OBSTACLE NOTES:
Rwy 6, hanger abeam DER, 208' left of centerline, 25' AGL/119' MSL.
Trees abeam DER. 154' right of centerline, up to 100' AGL/189' MSL.
Power lines abeam DER, 193' right of centerline, up to 75' AGL/164' MSL.
Buildings abeam DER, 237' right of centerline, up to 25' AGL/114' MSL.
Vehicle on road 237' from DER, left and right of centerline, up to 15' AGL/104' MSL.
Building 449' from DER, 234' left of centerline, 25' AGL/124' MSL.
Building 382' from DER, 180' left of centerline, 25' AGL/104' MSL.
Light poles beginning 439' from DER, 162' left of centerline, 75' AGL/154' MSL.
Power lines beginning 315' from DER, 308' left of centerline, up to 75' AGL/154' MSL.
Power lines beginning 613' from DER, left and right of centerline, up to 75' AGL/144' MSL.
Building 668' from DER, 169' left of centerline, 25' AGL/104' MSL.
Tower 4876' from DER, 1092' left of centerline, 210' AGL/250' MSL.
Rwy 24, trees beginning abeam DER, left and right of centerline, up to 100' AGL/369' MSL.
Train 10' from DER, left and right of centerline, 23' AGL/112' MSL.
Rising terrain beginning 5161' from DER, left and right of centerline, up to 269' MSL.
Power lines beginning 7248' from DER, left and right of centerline, up to 125' AGL/374' MSL.

FRIENDLY, MD

POTOMAC AIRFIELD (VKX)

TAKEOFF MINIMUMS AND (OBSTACLE) DEPARTURE PROCEDURES

ORIG-A 07APR11 (11097) (FAA)

TAKEOFF MINIMUMS:
Rwy 6, 500-2½ or std. w/ min. climb of 290' per NM to 700.
Rwy 24, 300-1.

TAKEOFF OBSTACLE NOTES:
Rwy 6, 50' AGL trees 300' left of DER, 75' AGL trees 320' right of DER.
Tower 1.9 NM from DER, on centerline 301' AGL/550' MSL.
Rwy 24, 80' AGL trees 200' right of DER, 75' AGL.
Trees 200' left of DER, 30' AGL hanger 200' from DER, 190' right of centerline.

FRONT ROYAL, VA

FRONT ROYAL-WARREN COUNTY (FRR)

TAKEOFF MINIMUMS AND (OBSTACLE) DEPARTURE PROCEDURES

AMDT 1 29JUL10 (10210) (FAA)

TAKEOFF MINIMUMS:
Rwy 10, 300-1¼ or std. w/ min. climb of 415' per NM to 1100.
Rwy 28, NA-obstacles.

DEPARTURE PROCEDURE:
Rwy 10, climbing left turn direct MRB VORTAC before proceeding on course.

TAKEOFF OBSTACLE NOTES:
Rwy 10, vehicles on roadway beginning 221' from DER, left and right of centerline, up to 17' AGL/736' MSL.
Power lines beginning 835' from DER, left and right of centerline, up to 79' AGL/828' MSL.
Trees beginning 1060' from DER, 51' left of centerline, up to 100' AGL/779' MSL.
Trees beginning 1660' from DER, 550' right of centerline, up to 100' AGL/939' MSL.

GAITHERSBURG, MD
MONTGOMERY COUNTY AIRPARK (GAI)
TAKEOFF MINIMUMS AND (OBSTACLE) DEPARTURE PROCEDURES
AMDT 1 05MAR15 (15064) (FAA)
TAKEOFF OBSTACLE NOTES:
Rwy 14, building, pole, and trees beginning 217' from DER, 81' right of centerline, up to 52' AGL/601' MSL.
Building, poles, and trees beginning 244' from DER, 196' left of centerline, up to 51' AGL/610' MSL.
Trees 1323' from DER, 841' right of centerline, up to 117' AGL/656' MSL.
Trees beginning 1965' from DER, 628' left of centerline, up to 104' AGL/663' MSL.
Rwy 32, trees beginning 26' from DER, 181' left of centerline, up to 77' AGL/556' MSL.
Trees beginning 72' from DER, 202' right of centerline, up to 53' AGL/532' MSL.
Trees beginning 3350' from DER, 903' right of centerline, up to 93' AGL/592' MSL.

GALAX-HILLSVILLE, VA
TWIN COUNTY (HLX)
TAKEOFF MINIMUMS AND (OBSTACLE) DEPARTURE PROCEDURES
AMDT 3 31MAY12 (12152) (FAA)
TAKEOFF MINIMUMS:
Rwy 1, 300-1 or std. w/ min. climb of 310' per NM to 2900.
DEPARTURE PROCEDURE:
Rwy 19, climb heading 187° to 3300 before turning left.
TAKEOFF OBSTACLE NOTES:
Rwy 1, vehicles on roadway beginning 122' from DER, left and right of centerline, up to 15' AGL/2674' MSL.
Tree 195' from DER, 432' right of centerline, 49' AGL/2669' MSL.
Trees beginning 1215' from DER, left and right of centerline, up to 107' AGL/2699' MSL.
Trees beginning 2098' from DER, left and right of centerline, up to 105' AGL/2768' MSL.
Trees beginning 4071' from DER, 1192' left of centerline, up to 79' AGL/2799' MSL.
Rwy 19, trees beginning 135' from DER, 455' left of centerline, up to 108' AGL/2748' MSL.
Trees beginning 314' from DER, 434' right of centerline, up to 100' AGL/2760' MSL.
Tree 925' from DER, 254' left of centerline, 80' AGL/2720' MSL.
Trees beginning 1470' from DER, 248' right of centerline, up to 113' AGL/2753' MSL.

GEORGETOWN, DE
DELAWARE COASTAL (GED)
TAKEOFF MINIMUMS AND (OBSTACLE) DEPARTURE PROCEDURES
AMDT 4B 10NOV16 (16315) (FAA)
TAKEOFF MINIMUMS:
Rwy 22, 200-1¼ or std. w/min. climb of 201' per NM to 300, or alternatively with standard takeoff minimums and a normal 200' per NM climb gradient, takeoff must occur no later than 1100' prior to DER.
TAKEOFF OBSTACLE NOTES:
Rwy 4, trees beginning 7' from DER, 459' left of centerline, up to 74' AGL/118' MSL.
Tree 2322' from DER, 428' right of centerline, 61' AGL/109' MSL.
Tree 5161' from DER, 710' left of centerline, 180' MSL.
Rwy 10, vehicle on road 94' from DER, 446' left of centerline, 15' AGL/59' MSL.
Trees and pole beginning 443' from DER, 87' left of centerline, up to 100' AGL/144' MSL.
Trees beginning 641' from DER, 109' right of centerline, up to 100' AGL/144' MSL.
Tree 3732' from DER, 37' left of centerline, 100' AGL/149' MSL.
Rwy 22, tree 2035' from DER, 781' left of centerline, 172' MSL.
Tower 1 NM from DER, 465' left of centerline, 215' MSL.
Rwy 28, trees beginning 358' from DER, 567' left of centerline, up to 100' AGL/149' MSL.
Trees beginning 1299' from DER, 686' right of centerline, up to 100' AGL/149' MSL.
Trees beginning 1595' from DER, 647' right of centerline, up to 100' AGL/154' MSL.
Trees beginning 1892' from DER, crossing centerline, up to 100' AGL/154' MSL.
Tank 4498' from DER, 219' right of centerline, 180' MSL.

GORDONSVILLE, VA
GORDONSVILLE MUNI (GVE)
TAKEOFF MINIMUMS AND (OBSTACLE) DEPARTURE PROCEDURES
ORIG 15DEC11 (11349) (FAA)
TAKEOFF MINIMUMS:
Rwy 5, 500-2½ or std. w/min. climb of 317' per NM to 1100.
Rwy 23, 300-2½ or std. w/min. climb of 384' per NM to 700.
DEPARTURE PROCEDURE:
Rwy 5, climb heading 048° to 1500 before proceeding on course.
Rwy 23, climb heading 213° to 2000 before turning right.
TAKEOFF OBSTACLE NOTES:
Rwy 5, trees beginning 341' from DER, 529' right of centerline, up to 100' AGL/699' MSL.
Vehicles on roadway 738' from DER, 477' left of centerline, up to 17' AGL/476' MSL.
Trees beginning 789' from DER, 507' left of centerline, up to 100' AGL/939' MSL.
Railroad 1111' from DER, 255' right of centerline, up to 23' AGL/482' MSL.
Rwy 23, trees beginning 300' from DER, 199' right of centerline, up to 100' AGL/739' MSL.
Trees beginning 805' from DER, 423' left of centerline, up to 100' AGL/739' MSL.
Rising terrain beginning 2.9 NM from DER, 2.5 NM right of centerline, up to 2039' MSL.

HAGERSTOWN, MD

HAGERSTOWN RGNL/RICHARD A HENSON FLD (HGR)

TAKEOFF MINIMUMS AND (OBSTACLE) DEPARTURE PROCEDURES

AMDT 6 17OCT13 (21336) (FAA)

DEPARTURE PROCEDURE:

Rwy 9, climbing left turn to intercept HGR VOR R-084 to 2500 before proceeding on course.

Rwy 27, climb on heading 272° to 2300 before turning right.

TAKEOFF OBSTACLE NOTES:

Rwy 2, pole 22' from DER, 434' right of centerline, 20' AGL/719' MSL.
Telephone pylon 98' from DER, 351' right of centerline, 30' AGL/729' MSL.
Pole 100' from DER, 352' right of centerline, 31' AGL/730' MSL.
Catenary 113' from DER, 515' right of centerline, 32' AGL/731' MSL.
Antenna 190' from DER, 392' right of centerline, 38' AGL/737' MSL.
Building 1115' from DER, 289' left of centerline, 10' AGL/749' MSL.
Road 1215' from DER, 8' right of centerline, 3' AGL/742' MSL.
Trees beginning 1295' from DER, left and right of centerline, up to 99' AGL/838' MSL.
Rwy 9, MALSR 6' from DER, 5' left of centerline, 48' AGL/687' MSL.
Tree 963' from DER, 754' left of centerline, 75' AGL/714' MSL.
Rwy 20, light and poles beginning 334' from DER, left and right of centerline, up to 40' AGL/734' MSL.
Tree 1504' from DER, 342' left of centerline, 36' AGL/735' MSL.
Silo 1590' from DER, 93' left of centerline, 34' AGL/733' MSL.
Tree 2051' from DER, 592' left of centerline, 100' AGL/759' MSL.
Tree 2540' from DER, 722' left of centerline, 100' AGL/779' MSL.
Rwy 27, trees beginning 668' from DER, 515' left of centerline, up to 80' AGL/719' MSL.
Building 1895' from DER, 510' left of centerline, 73' AGL/713' MSL.

HOT SPRINGS, VA

INGALLS FLD (HSP)

TAKEOFF MINIMUMS AND (OBSTACLE) DEPARTURE PROCEDURES

AMDT 4 13JAN11 (21224) (FAA)

DEPARTURE PROCEDURE:

Rwy 25, climb heading 247° to 4400 before turning left.

TAKEOFF OBSTACLE NOTES:

Rwy 7, tree 52' from DER, 395' left of centerline, 64' AGL/3784' MSL.
Rwy 25, trees, building, and terrain beginning 172' from DER, 167' left of centerline, up to 60' AGL/3860' MSL. Obstacle light on pipe 376' from DER, 421' left of centerline, up to 28' AGL/3828' MSL.

INDIAN HEAD, MD

MARYLAND (2W5)

TAKEOFF MINIMUMS AND (OBSTACLE) DEPARTURE PROCEDURES

ORIG 24JUL14 (14205) (FAA)

TAKEOFF OBSTACLE NOTES:

Rwy 2, trees beginning at DER, 208' right of centerline up to 100' AGL/279' MSL.
Trees beginning 1103' from DER, 366' left of centerline up to 100' AGL/279' MSL.
Trees beginning 1564' from DER, left and right of centerline up to 100' AGL/279' MSL.
Building beginning 1255' from DER, 759' right of centerline, 25' AGL/204' MSL.
Rwy 20, trees beginning 404' from DER, 25' right of centerline up to 100' AGL/259' MSL.
Trees beginning at DER, 243' left of centerline up to 100' AGL/249' MSL.
Trees beginning 1069' from DER, 316' right of centerline up to 100' AGL/279' MSL.
Trees beginning 1388' from DER, 332' left of centerline up to 100' AGL/279' MSL.
Building 1401' from DER, 744' right of centerline, 25' AGL/194' MSL.

JOINT BASE ANDREWS (KADW)
CAMP SPRINGS, MD
TAKEOFF MINIMUMS AND (OBSTACLE) DEPARTURE PROCEDURES
10OCT19 (19283)
TAKEOFF OBSTACLE NOTES:
Rwy 1L, tree 3761' from DER, 1564' left of cntrln, 362' MSL.
Tree 3073' from DER, 907' right of cntrln, 352' MSL.
Tree 2960' from DER, 767' right of cntrln, 351' MSL.
Tree 2842' from DER, 1082' right of cntrln, 344' MSL.
Tree 2373' from DER, 742' left of cntrln, 335' MSL.
Rwy 1R, crane 5460' from DER, 892' right of cntrln, 381' MSL.
Stadium light 3036' from DER, 1020' right of cntrln, 361' MSL.
Tree 2879' from DER, 362' left of cntrln, 349' MSL.
Tree 2626' from DER, 1093' left of cntrln, 352' MSL.
Tree 2395' from DER, 918' left of cntrln, 344' MSL.
Tree 2355' from DER, 478' right of cntrln, 335' MSL.
Tree 1659' from DER, 507' left of cntrln, 326' MSL.
Tree 1551' from DER, 641' right of cntrln, 327' MSL.
Tree 1585' from DER, 536' right of cntrln, 322' MSL.
Tree 1665' from DER, 521' left of cntrln, 320' MSL.
Tree 1509' from DER, 857' right of cntrln, 333' MSL.
Rwy 19L, tree 3696' from DER, 499' left of cntrln, 341' MSL.
Tree 3660' from DER, 784' left of cntrln, 353' MSL.
Tree 2877' from DER, 1111' right of cntrln, 314' MSL.
Tree 2654' from DER, 944' right of cntrln, 311' MSL.
Tree 2653' from DER, 1107' right of cntrln, 314' MSL.
Tree 1706' from DER, 700' left of cntrln, 320' MSL.
Tree 1454' from DER, 852' left of cntrln, 317' MSL.
Terrain 270' from DER, 581' left of cntrln, 260' MSL.
Rwy 19R, twr 4659' from DER, 1650' right of cntrln, 355' MSL.
Twr 4624' from DER, 1663' right of cntrln, 372' MSL.
Twr 4561' from DER, 1658 right of cntrln, 359' MSL.
Twr 4529' from DER, 1590' right of cntrln, 358' MSL.
Twr 4473' from DER, 1553' right of cntrln, 360' MSL.
Twr 4386' from DER, 1659' right of cntrln, 355' MSL.
Tree 2868' from DER, 888' left of cntrln, 314' MSL.
Tree 2645' from DER, 891' left of cntrln, 314' MSL.
Tree 2645' from DER, 1054' left of cntrln, 331' MSL.
Trees beginning 2645' from DER, 1054' left of cntrln, 331' MSL.

JONESVILLE, VA
LEE COUNTY (0VG)
TAKEOFF MINIMUMS AND (OBSTACLE) DEPARTURE PROCEDURES
ORIG 23NOV06 (06327) (FAA)
TAKEOFF MINIMUMS:
Rwy 7, std. w/ min. climb of 467' per NM to 3800, or 1900-3 for climb in visual conditions.
Rwy 25, std. w/ min. climb of 442' per NM to 3500, or 1900-3 for climb in visual conditions.
DEPARTURE PROCEDURE:
Rwys 7, 25, for climb in visual conditions cross Lee County Airport at or above 3200 before proceeding on course.
TAKEOFF OBSTACLE NOTES:
Rwy 7, terrain 116' from DER, 72' right of centerline, 1439' MSL.
Terrain 691' from DER, 53' right of centerline, 1459' MSL.
Terrain 267' from DER, 190' left of centerline, 1439' MSL.
Terrain 479' from DER, 68' left of centerline, 1459' MSL.

KENBRIDGE, VA
LUNENBURG COUNTY (W31)
TAKEOFF MINIMUMS AND (OBSTACLE) DEPARTURE PROCEDURES
ORIG 13JAN11 (11013) (FAA)
TAKEOFF OBSTACLE NOTES:
Rwy 2, trees beginning 219' from DER, left and right of centerline, up to 100' AGL/639' MSL.
Vehicles on roadway, beginning 561' from DER, 519' right of centerline, up to 15' AGL/544' MSL.
Rwy 20, trees at DER, left and right of centerline, up to 100' AGL/599' MSL.

LANGLEY AFB (KLFI)
HAMPTON, VA
TAKEOFF MINIMUMS AND (OBSTACLE) DEPARTURE PROCEDURES
ORIG 22AUG13 (13234)
Rwy 8, 600-3*
*Or standard with minimum climb of 256 ft/NM to 800.
TAKEOFF OBSTACLE NOTES:
Rwy 8, Boat 2257' from DER, 777' left of centerline, 60' AGL/60' MSL.
Boat 2497' from DER, 57' left of centerline, 60' AGL/60' MSL.
Vehicle on road 1048' from DER, 703' right of centerline, 15' AGL/23' MSL.
Boat 1807' from DER, 552' right of centerline, 60' AGL/60' MSL.
Boat 2837' from DER, 643' right of centerline, 60' GL/60' MSL.
Rwy 26, Terrain 0' from DER, 369' left of centerline, 11' MSL.
Tree 4052' from DER, 688' left of centerline,100' AGL/116' MSL.
Tree 4842' from DER, 690' left of centerline, 100' AGL/116' MSL.
Tree 4093' from DER, 82' left of centerline, 99' AGL/111' MSL.
Tree 4155' from DER, 339' right of centerline, 100' AGL/113' MSL.
Tree 4039' from DER, 620' right of centerline, 100' AGL/109' MSL.
Tree 3807' from DER, 1181' right of centerline, 100' AGL/113' MSL.
Building 1390' from DER, 825' left of centerline, 24' AGL/36' MSL.

LAUREL, DE
LAUREL (N06)
TAKEOFF MINIMUMS AND (OBSTACLE) DEPARTURE PROCEDURES
AMDT 2 05APR12 (12096) (FAA)
TAKEOFF MINIMUMS:
Rwy 15, 600-2¾ or std. w/min. climb of 286' per NM to 800.
DEPARTURE PROCEDURE:
Rwy 15, climb heading 148° to 1200 before proceeding on course.
Rwy 33, climb heading 328° to 1200 before preceding on course.
TAKEOFF OBSTACLE NOTES:
Rwy 15, tower 2.4 NM from DER, 253' left of centerline, 500' AGL/542' MSL.

LAWRENCEVILLE, VA
BRUNSWICK COUNTY (LVL)
TAKEOFF MINIMUMS AND (OBSTACLE) DEPARTURE PROCEDURES
ORIG-A 30JAN20 (21224) (FAA)
TAKEOFF OBSTACLE NOTES:
Rwy 18, trees 1654' from DER, 772' left of centerline, 88' AGL/407' MSL.
Trees 200' from DER, on centerline, 22' AGL/321' MSL.
Rwy 36, trees 1487' from DER, 20' left of centerline, 88' AGL/420' MSL.
Trees 113' from DER, 372' right of centerline, 88' AGL/420' MSL.

LEESBURG, VA
LEESBURG EXEC (JYO)
TAKEOFF MINIMUMS AND (OBSTACLE) DEPARTURE PROCEDURES
AMDT 2 23SEP10 (21112) (FAA)
DEPARTURE PROCEDURE:
Rwy 35, climb heading 351° to 1200 before proceeding on course.
TAKEOFF OBSTACLE NOTES:
Rwy 17, vehicle on roadway, 320' from DER, 565' left of centerline, up to 15' AGL/414' MSL.
Building 167' from DER, 360' left of centerline, 22' AGL/401' MSL.
Pole 958' from DER, 373' left of centerline, 32' AGL/421' MSL.
Trees beginning 138' from DER, left and right of centerline, up to 100' AGL/464' MSL.
Rwy 35, terrain 96' from DER, 453' left of centerline, 381' MSL.
Tree 1078' from DER, 525' left of centerline, up to 100' AGL/413' MSL.
Pole 638' from DER, 642' right of centerline, 49' AGL/428' MSL.

LEONARDTOWN, MD
ST MARY'S COUNTY RGNL (2W6)
TAKEOFF MINIMUMS AND (OBSTACLE) DEPARTURE PROCEDURES
ORIG 18JAN07 (07018) (FAA)
TAKEOFF OBSTACLE NOTES:
Rwy 11, multiple trees beginning 88' from DER, 339' left of centerline, up to 80' AGL/205' MSL.
Multiple trees beginning 61' from DER, 193' right of centerline up to 80' AGL/205' MSL.
Rwy 29, multiple trees beginning 996' from DER, 227' left of centerline up to 79' AGL/221' MSL.
Multiple trees beginning 596' from DER, 277' right of centerline up to 71' AGL/213' MSL.
Multiple towers on buildings beginning 53' from DER, 400' right of centerline up to 26' AGL/168' MSL.
Equipment on building 223' from DER, 449' right of centerline, 15' AGL/169' MSL.
Tower 402' from DER, 399' right of centerline, 33' AGL/175' MSL.
Fence 496' from DER, 241' right of centerline, 22' AGL/164' MSL.

LOUISA, VA

LOUISA COUNTY/FREEMAN FLD (LKU)

TAKEOFF MINIMUMS AND (OBSTACLE) DEPARTURE PROCEDURES

AMDT 1 29JUL10 (21280) (FAA)

TAKEOFF OBSTACLE NOTES:

Rwy 9, trees beginning abeam DER, 316' right of centerline, up to 100' AGL/589' MSL.
Trees beginning 765' from DER, 644' left of centerline, up to 95' AGL/545' MSL.
Trees beginning 889' from DER, 150' right of centerline, up to 59' AGL/519' MSL.
Rwy 27, trees beginning abeam DER, 350' right of centerline, up to 100' AGL/569' MSL.
Trees beginning 212' from DER, 133' right of centerline, up to 100' AGL/569' MSL.
Trees beginning 70' from DER, 513' left of centerline, up to 100' AGL/569' MSL.
Building 148' from DER, 440' left of centerline, 14' AGL/484' MSL.
Trees beginning 587' from DER, left and right of centerline, up to 100' AGL/549' MSL.

LURAY, VA

LURAY CAVERNS (LUA)

TAKEOFF MINIMUMS AND (OBSTACLE) DEPARTURE PROCEDURES

AMDT 2A 26MAR20 (20086) (FAA)

TAKEOFF MINIMUMS:

Rwy 4, std. w/min. climb of 400’ per NM to 3900 or 3200-3 for VCOA.
Rwy 22, std. w/min. climb of 400’ per NM to 4000 or 3200-3 for VCOA.

DEPARTURE PROCEDURE:

Rwy 4, climb heading 044° to intercept bearing 044° from LUA NDB to 4000 before proceeding on course.
Rwy 22, climbing left turn heading 200° to intercept LDN VORTAC R-230 to 5000 before proceeding on course.

VCOA:

All Runways, obtain ATC approval for VCOA when requesting IFR clearance. Climb in visual conditions to cross Luray Caverns airport at or above 4000 before proceeding on course.

TAKEOFF OBSTACLE NOTES:

Rwy 4, trees, traverse ways, pole, antennas, and building beginning 113’ from DER, 138’ right of centerline, up to 44’ AGL/938’ MSL.
Tree 1080’ from DER, 584’ right of centerline, 941’ MSL.
Trees beginning 1099’ from DER, 280’ right of centerline, up to 942’ MSL.
Trees and poles beginning 1282’ from DER, 103’ right of centerline, up to 959’ MSL.
Trees beginning 1596’ from DER, 220’ right of centerline, up to 964’ MSL.
Trees beginning 1693’ from DER, 178’ right of centerline, up to 967’ MSL.
Trees beginning 1807’ from DER, 22’ right of centerline, up to 968’ MSL.
Trees beginning 2247’ from DER, 254’ right of centerline, up to 972’ MSL.
Tree 2306’ from DER, 88’ right of centerline, 983’ MSL.
Tree 2331’ from DER, 187’ right of centerline, 985’ MSL.
Trees beginning 2360’ from DER, 5’ left of centerline, up to 976’ MSL.
Trees beginning 2422’ from DER, 14’ right of centerline, up to 987’ MSL.
Trees beginning 2459’ from DER, 33’ right of centerline, up to 93’ AGL/995’ MSL.
Rwy 22, trees beginning 23’ from DER, 313’ right of centerline, up to 34’ AGL/929’ MSL.
Tree 68’ from DER, 304’ left of centerline, 905’ MSL.
Tree 135’ from DER, 186’ left of centerline, 910’ MSL.
Trees beginning 261’ from DER, 26’ left of centerline, up to 65’ AGL/955’ MSL.
Trees beginning 333’ from DER, 184’ right of centerline, up to 936’ MSL.

LYNCHBURG, VA

FALWELL (W24)

TAKEOFF MINIMUMS AND (OBSTACLE) DEPARTURE PROCEDURES

AMDT 1 05JUL07 (07186) (FAA)

TAKEOFF MINIMUMS:

Rwy 10, 1100-2½ for climb in visual conditions.
Rwy 28, NA-obstacle.

DEPARTURE PROCEDURE:

Rwy 10, for climb in visual conditions: cross Falwell Airport at or above 1900 before proceeding on course.

TAKEOFF OBSTACLE NOTES:

Rwy 10, multiple trees 9' from DER, 87' right of centerline, up to 100' AGL/899' MSL.
Multiple power lines 2896' from DER, 1192' right of centerline, up to 149' AGL/968' MSL.

LYNCHBURG, VA (CON'T)

LYNCHBURG RGNL/PRESTON GLENN FLD (LYH)

TAKEOFF MINIMUMS AND (OBSTACLE) DEPARTURE PROCEDURES

AMDT 8 13MAR08 (22083) (FAA)

TAKEOFF MINIMUMS:

Rwy 17, 300-2¼ or std. w/min. climb of 232' per NM to 1500.

Rwy 35, std. w/min. climb of 350' per NM to 3000, or 1700-3 for climb in visual conditions.

DEPARTURE PROCEDURE:

Rwy 4, climb heading 036° to 2200 before proceeding on course.

Rwy 17, climb heading 169° to 1800 before turning right.

Rwy 22, climb heading 216° to 1800 before turning right.

Rwy 35, climb heading 349° to 3000 before turning left, or for climb in visual conditions: cross Lynchburg Rgnl/Preston Glenn Fld at or above 2500' MSL before proceeding on course.

TAKEOFF OBSTACLE NOTES:

Rwy 4, trees beginning 2029' from DER, 62' right of centerline up to 81' AGL/999' MSL.
Trees beginning 1422' from DER, 3' left of centerline up to 76' AGL/995' MSL.
Poles beginning 427' from DER, 483' right of centerline up to 44' AGL/1044' MSL.
Obstruction lights on fence beginning 2' from DER, 500' right of centerline up to 30' AGL/ 948' MSL.
Antenna on building 395' from DER, 277' right of centerline 15' AGL/954' MSL.
Light 606' from DER, 599' right of centerline, 18' AGL/982' MSL.
Building 400' from DER, 345' right of centerline, 12' AGL/951' MSL.

Rwy 17, trees beginning 284' from DER, 77' left of centerline up to 277' AGL/1195' MSL.
Trees beginning 265' from DER, 178' right of centerline up to 57' AGL/969' MSL.
Obstruction light on pole 9326' from DER 333' left of centerline, 270' AGL/1188MSL.

Rwy 22, trees beginning 274' from DER, 245' right of centerline up to 41' AGL/979' MSL.
Trees beginning 2616' from DER, 206' left of centerline up to 41' AGL/ 979' MSL.
Poles beginning 2872' from DER, 603' right of centerline up to 44' AGL/982' MSL.

Rwy 35, trees beginning 2955' from DER, 140' right of centerline up to 96' AGL/ 1014' MSL.
Trees beginning 722' from DER, 71' left of centerline up to 119' AGL/1037' MSL.
Pole 36' from DER 98' left of centerline, 25' AGL/ 943' MSL.

MARION/WYTHEVILLE, VA

MOUNTAIN EMPIRE (MKJ)

TAKEOFF MINIMUMS AND (OBSTACLE) DEPARTURE PROCEDURES

AMDT 2 26JUL12 (12208)

TAKEOFF MINIMUMS:

Rwy 8, 300-1¾.

Rwy 26, std. w/min. climb of 265' per NM to 3400 or 4600-3 for climb in visual conditions.

DEPARTURE PROCEDURE:

Rwy 8, climb heading 079° to 4100 before proceeding on course.

Rwy 26, climb heading 259° to 4400 before proceeding on course or for climb in visual conditions: cross Mountain Empire airport at or above 4600' MSL before proceeding on course. When executing VCOA, notify ATC prior to departure.

TAKEOFF OBSTACLE NOTES:

Rwy 8, trees beginning 58' from DER, left and right of centerline, up to 100' AGL/2819' MSL.
Vehicles beginning 225' from DER, left and right of centerline, up to 17' AGL/2540' MSL.
Poles beginning 703' from DER, left and right of centerline, up to 123' AGL/2537' MSL.

Rwy 26, trees and vehicles beginning 250' from DER, left and right of centerline, up to 100' AGL/3039' MSL.

MARTINSVILLE, VA

BLUE RIDGE (MTV)

TAKEOFF MINIMUMS AND (OBSTACLE) DEPARTURE PROCEDURES

AMDT 3A 31DEC20 (20366) (FAA)

TAKEOFF MINIMUMS:

Rwy 13, std. w/ min. climb of 249' per NM to 2100 or 1900-3 for climb in visual conditions.

Rwy 31, std. w/ min. climb of 321' per NM to 4300 or 1900-3 for climb in visual conditions.

DEPARTURE PROCEDURE:

Rwy 13, climb heading 125° to 2200 before proceeding on course. For climb in visual conditions: cross Blue Ridge airport at or above 2700 MSL before proceeding on course.

Rwy 31, for climb in visual conditions: cross Blue Ridge airport at or above 2700 MSL before proceeding on course.

TAKEOFF OBSTACLE NOTES:

Rwy 13, trees beginning 316' from DER, 320' left of centerline, up to 47' AGL/956' MSL.
Trees beginning 38' from DER, 380' right of centerline, 82' AGL/941' MSL.

Rwy 31, trees beginning 82' from DER, 9' right of centerline, up to 100' AGL/1058' MSL.
Vehicle on road 638' from DER, 418' right of centerline, 15' AGL/974' MSL.
Obstruction light on DME 1031' from DER, 304' right of centerline, 18' AGL/977' MSL.
Fence 947' from DER, 400' right of centerline, 12' AGL/971' MSL.
Trees beginning 102' from DER, 94' left of centerline, up to 77' AGL/1047' MSL.

MELFA, VA

ACCOMACK COUNTY (MFV)

TAKEOFF MINIMUMS AND (OBSTACLE) DEPARTURE PROCEDURES

AMDT 1 25OCT07 (07298) (FAA)

TAKEOFF OBSTACLE NOTES:

Rwy 3, multiple trees beginning 41' from DER, 221' right of centerline, up to 84' AGL/128' MSL.
Truck on road 204' from DER, 231' left of centerline, 15' AGL/61' MSL.
Multiple trees beginning 249' from DER, 14' left of centerline, up to 106' AGL/155' MSL.
Truck on road 494' from DER, 228' left of centerline, 15' AGL/62' MSL.
Rod on obstruction light tower 862' from DER, 402' left of centerline, 55' AGL/99' MSL.
Rwy 21, multiple trees beginning 27' from DER, 395' right of centerline, up to 91' AGL/135' MSL.
Multiple trees 504' from DER, 403' left of centerline, up to 110' AGL/144' MSL.

MIDDLETOWN, DE

SUMMIT (EVY)

TAKEOFF MINIMUMS AND (OBSTACLE) DEPARTURE PROCEDURES

AMDT 2B 20JUN19 (19171) (FAA)

TAKEOFF MINIMUMS:

Rwys 11, 29, NA-Environmental.
Rwy 35, 300-1⅛ or std. w/min. climb of 300' per NM to 400.

TAKEOFF OBSTACLE NOTES:

Rwy 17, trees beginning 14' from DER, 474' right of centerline, up to 45' AGL/111' MSL.
Tree 1277' from DER, 395' right of centerline, 60' AGL/126' MSL.
Tree 1349' from DER, 661' right of centerline, 91' AGL/156' MSL.
Pole and catenary beginning 1379' from DER, 378' left of centerline, up to 34' AGL/101' MSL.
Tree 1627' from DER, 906' right of centerline, 97' AGL/160' MSL.
Trees beginning 1639' from DER, 384' right of centerline, up to 97' AGL/161' MSL.
Rwy 35, tree 39' from DER, 475' left of centerline, 50' AGL/115' MSL.
Traverse way 350' from DER, 404' right of centerline, 81' MSL.
Pole 357' from DER, 487' right of centerline, 43' AGL/104' MSL.
Trees beginning 381' from DER, 359' left of centerline, up to 53' AGL/119' MSL.
Poles and tree beginning 689' from DER, 28' right of centerline, up to 43' AGL/106' MSL.
Trees beginning 1380' from DER, 43' right of centerline, up to 67' AGL/127' MSL.
Trees and elevator beginning 1782' from DER, 194' right of centerline, up to 77' AGL/128' MSL.
Trees beginning 1970' from DER, 368' left of centerline, up to 61' AGL/127' MSL.
Tree 3473' from DER, 167' left of centerline, 88' AGL/157' MSL.
Transmission line 5084' from DER, 575' right of centerline, 178' AGL/243' MSL.
Tower 5086' from DER, 1066' right of centerline, 202' AGL/255' MSL.
Tower 5591' from DER, 1094' right of centerline, 169' AGL/257' MSL.
Transmission line 5734' from DER, 564' right of centerline, 170' AGL/245' MSL.

MONETA, VA

SMITH MOUNTAIN LAKE (W91)

TAKEOFF MINIMUMS AND (OBSTACLE) DEPARTURE PROCEDURES

AMDT 1 18SEP14 (14261) (FAA)

TAKEOFF MINIMUMS:

Rwy 5, 400-2¼ or std. w/min. climb of 565' per NM to 1200.

DEPARTURE PROCEDURE:

Rwy 5, climb heading 054° to 2600 before proceeding on course.
Rwy 23, climb heading 234° to 1900 before proceeding on course.

TAKEOFF OBSTACLE NOTES:

Rwy 5, trees beginning abeam DER, 144' right of centerline, up to 100' AGL/1019' MSL.
Vehicles on road beginning 3' from DER, left and right of centerline, up to 15' AGL/1034' MSL.
Aircraft on taxiway, 132' left of centerline, up to 20' AGL/939' MSL.
Trees beginning 303' from DER, 211' left of centerline, up to 100' AGL/1039' MSL.
Trees beginning 3234' from DER, 44' right of centerline, up to 100' AGL/1119' MSL.
Trees beginning 2954' from DER, 83' left of centerline, up to 100' AGL/1099' MSL.
Rwy 23, trees beginning 13' from DER, 149' left of centerline, up to 100' AGL/979' MSL.
Vehicles on road beginning 19' from DER, left and right of centerline, up to 15' AGL/894' MSL.
Trees beginning 622' from DER, 316' right of centerline, up to 100' AGL/979' MSL.

NEWPORT NEWS, VA

NEWPORT NEWS/WILLIAMSBURG INTL (PHF)

TAKEOFF MINIMUMS AND (OBSTACLE) DEPARTURE PROCEDURES

AMDT 1 26MAY16 (16147) (FAA)

TAKEOFF OBSTACLE NOTES:

Rwy 2, REIL 15' from DER, 150' left of centerline, 43' MSL.
Tree and airport sign beginning 21' from DER, 259' left of centerline, up to 50' MSL.
Trees beginning 45' from DER, 386' right of centerline, up to 51' MSL.
Trees beginning 212' from DER, 375' right of centerline, up to 53' MSL.
Tree 366' from DER, 597' right of centerline, 55' MSL.
Tree 439' from DER, 487' right of centerline, 56' MSL.
Tree 689' from DER, 652' right of centerline, 60' MSL.
Pole 840' from DER, 625' left of centerline, 78' MSL.
Poles beginning 840' from DER, 522' left of centerline, up to 37' AGL/80' MSL.
Trees beginning 898' from DER, 723' right of centerline, up to 124' MSL.
Tree and pole beginning 935' from DER, 427' left of centerline, up to 131' MSL.
Trees beginning 1067' from DER, 253' right of centerline, up to 135' MSL.
Tree and pole beginning 1183' from DER, 498' right of centerline, up to 140' MSL.
Trees beginning 1399' from DER, 428' left of centerline, up to 150' MSL.
Trees beginning 1629' from DER, 413' right of centerline, up to 151' MSL.
Tree and t-l tower beginning 1704' from DER, 47' left of centerline, up to 156' MSL.
T-l towers and trees beginning 3347' from DER, 5' left of centerline, up to 163' MSL.
Rwy 7, signs beginning 55' from DER, 282' left of centerline, up to 8' AGL/42' MSL.
Tree 368' from DER, 588' left of centerline, 73' MSL.
Tree 1557' from DER, 906' right of centerline, 95' MSL.
Trees beginning 1557' from DER, 904' right of centerline, up to 96' MSL.
Tree 2279' from DER, 932' right of centerline, 99' MSL.
Trees beginning 2477' from DER, 909' right of centerline, up to 110' MSL.
Tree 3535' from DER, 1395' left of centerline, 140' MSL.
Trees beginning 3535' from DER, 1291' left of centerline, up to 141' MSL.
Trees beginning 3884' from DER, 965' left of centerline, up to 144' MSL.
Trees beginning 3927' from DER, 315' left of centerline, up to 147' MSL.
Trees beginning 3958' from DER, 235' left of centerline, up to 153' MSL.
Tree 4288' from DER, 454' right of centerline, 154' MSL.
T-l towers beginning 5621' from DER, 1337' left of centerline, up to 189' MSL.
Rwy 20, airport sign 41' from DER, 310' right of centerline, 39' MSL.
Bush 96' from DER, 290' left of centerline, 52' MSL.
Trees beginning 1038' from DER, 489' left of centerline, up to 90' MSL.
Trees beginning 2779 ' from DER, 1002' right of centerline, up to 111' MSL.
Rwy 25, tree 357' from DER, 563' right of centerline, 48' MSL.
Tree 539' from DER, 594' right of centerline, 59' MSL.
Trees beginning 623' from DER, 550' right of centerline, up to 71' MSL.
Tree 719' from DER, 580' right of centerline, 79' MSL.
Trees beginning 776' from DER, 581' right of centerline, up to 86' MSL.
Trees beginning 853' from DER, 600' right of centerline, up to 91' MSL.
Trees beginning 1021' from DER, 587' right of centerline, up to 97' MSL.
Tree 1046' from DER, 672' right of centerline, 112' MSL.
Tree 1121' from DER, 726' right of centerline, 115' MSL.
Tree 1121' from DER, 745' right of centerline, 119' MSL.
Trees beginning 1125' from DER, 335' right of centerline, up to 123' MSL.
Tree 3437' from DER, 1126' right of centerline, 139' MSL.

NEW MARKET, VA

NEW MARKET (8W2)

TAKEOFF MINIMUMS AND (OBSTACLE) DEPARTURE PROCEDURES

ORIG 31MAY12 (12152) (FAA)

TAKEOFF MINIMUMS:

Rwy 6, 1100-3 w/ min. climb of 376' per NM to 3700 or 2600-3 for climb in visual conditions.
Rwy 24, 1100-3 w/ min. climb of 290' per NM to 3700 or 2600-3 for climb in visual conditions.

DEPARTURE PROCEDURE:

Rwy 6, climb heading 048° to 3700 before proceeding on course or for climb in visual conditions: cross New Market airport at or above 3400 MSL before proceeding on course. When executing VCOA, notify ATC prior to departure.
Rwy 24, climb heading 243° to 3700 before proceeding on course or for climb in visual conditions: cross New Market airport at or above 3400 MSL before proceeding on course. When executing VCOA, notify ATC prior to departure.

TAKEOFF OBSTACLE NOTES:

Rwy 6, train beginning 2' from DER, 396' left of centerline, up to 23' AGL/1002' MSL.
Vehicles on road beginning 57' from DER, left and right of centerline, up to 15' AGL/994' MSL.
Trees beginning 754' from DER, 522' left of centerline, up to 100' AGL/1279' MSL.
Rwy 24, train beginning 11' from DER, 404' right of centerline, up to 23' AGL/1002' MSL.
Trees beginning 564' from DER, 257' right of centerline, up to 100' AGL/1319' MSL.

22 FEB 2024 to 21 MAR 2024
22 FEB 2024 to 21 MAR 2024

NORFOLK, VA

CHESAPEAKE RGNL (CPK)

TAKEOFF MINIMUMS AND (OBSTACLE) DEPARTURE PROCEDURES

AMDT 3 09FEB12 (12040) (FAA)

TAKEOFF OBSTACLE NOTES:

Rwy 5, trees beginning 143' from DER, left and right of centerline, up to 100' AGL/108' MSL.
Rwy 23, trees beginning 153' from DER, left and right of centerline, up to 105' AGL/122' MSL.

HAMPTON ROADS EXEC (PVG)

TAKEOFF MINIMUMS AND (OBSTACLE) DEPARTURE PROCEDURES

ORIG 18SEP14 (21224) (FAA)

TAKEOFF MINIMUMS:

Rwy 10, std. w/min. climb of 210' per NM to 600, or alternatively with std. takeoff minimums and a normal 200' per NM climb gradient, takeoff must occur no later than 1500' prior to DER or 1700-2½ for climb in visual conditions.

DEPARTURE PROCEDURE:

Rwy 2, climb heading 019° to 1600 before turning west.
Rwy 10, climb heading 102° to 1000 before proceeding on course, or for climb in visual conditions, cross Hampton Roads Exec airport at or above 1600 before proceeding on course. When executing VCOA, notify ATC prior to departure.
Rwy 20, climb heading 199° to 900 before turning North.
Rwy 28, climb heading 282° to 1500 before turning North.

TAKEOFF OBSTACLE NOTES:

Rwy 2, vehicles on roadway beginning 213' from DER, left and right of centerline, up to 15' AGL/39' MSL.
Trees beginning 663' from DER, left and right of centerline, up to 100' AGL/124' MSL.
Rwy 10, aircraft on taxiway beginning 9' from DER, 390' right of centerline, up to 26' AGL/49' MSL.
Bushes beginning 30' from DER, 156' right of centerline, up to 5' AGL/26' MSL.
Bushes beginning 96' from DER, 486' left of centerline, up to 12' AGL/33' MSL.
Trees beginning 2086' from DER, 19' left of centerline, up to 103' AGL/124' MSL.
Trees beginning 2103' from DER, 13' right of centerline, up to 113' AGL/134' MSL.
Rwy 20, aircraft on taxiway and buildings beginning 11' from DER, 144' right of centerline, up to 40' AGL/50' MSL.
Vehicles on roadway beginning 97' from DER, 14' left of centerline, up to 23' AGL/47' MSL.
Trains on railroad tracks and trees beginning 333' from DER, 571' left of centerline, up to 100' AGL/124' MSL.
Trains on railroad tracks and trees beginning 796' from DER, 90' right of centerline, up to 100' AGL/124' MSL.
Rwy 28, trees beginning 2267' from DER, 1071' left of centerline, up to 100' AGL/121' MSL.
Trees beginning 3793' from DER, 408' left of centerline, up to 113' AGL/134' MSL.

NORFOLK INTL (ORF)

TAKEOFF MINIMUMS AND (OBSTACLE) DEPARTURE PROCEDURES

AMDT 1 29MAY14 (14149) (FAA)

TAKEOFF OBSTACLE NOTES:

Rwy 5, multiple trees beginning 1521' from DER, 628' right of centerline, up to 85' AGL/95' MSL.
Towers beginning 2974' from DER, 773' right of centerline, up to 127' AGL/131' MSL.
Mobile crane 4334' from DER, 1106' right of centerline, 162' AGL/163' MSL.
Sign 82' from DER, 301' left of centerline, 11' AGL/19' MSL.
Pole 2696' from DER, 1063' left of centerline, 87' AGL/91' MSL.
Multiple towers beginning 2938' from DER, 927' left of centerline, up to 145' AGL/146' MSL.
Rwy 14, vehicle on road 2' from DER, 450' right of centerline, up to 10' AGL/36' MSL.
Multiple trees beginning 1193' from DER, 117' right of centerline, up to 82' AGL/97' MSL.
Multiple trees beginning 1755' from DER, 413' right of centerline, up to 85' AGL/100' MSL.
Numerous trees beginning 2109' from DER, 150' right of centerline, up to 121' AGL/136' MSL.
Tree 3323' from DER, 308' right of centerline, 101' AGL/121' MSL.
Poles beginning 1307' from DER, 255' right of centerline, up to 43' AGL/62' MSL.
Numerous trees beginning 1230' from DER, 40' left of centerline, up to 84' AGL/104' MSL.
Pole 1567' from DER, 95' left of centerline, 42' AGL/62' MSL.
Multiple trees beginning 2347' from DER, 57' left of centerline, up to 83' AGL/103' MSL.
Multiple trees beginning 3086' from DER, 235' left of centerline, up to 101' AGL/121' MSL.
Rwy 23, trees beginning 324' from DER, 484' right of centerline, up to 28' AGL/43' MSL.
Trees beginning 1989' from DER, 26' right of centerline, up to 61' AGL/76' MSL.
Pole 1012' from DER, 650' right of centerline, 62' AGL/73' MSL.
Pole 2166' from DER, 840' right of centerline, 41' AGL/74' MSL.
Vehicle on road 128' from DER, 508' left of centerline, 10' AGL/31' MSL.
Multiple trees beginning 619' from DER, 560' left of centerline, up to 66' AGL/76' MSL.
Pole 1434' from DER, 739' left of centerline, 57' AGL/71' MSL.
Multiple trees beginning 1801' from DER, 46' left of centerline, up to 65' AGL/85' MSL.
Trees beginning 2797' from DER, 448' left of centerline, up to 103' AGL/113' MSL.
Rwy 32, multiple trees beginning 17' from DER, 459' right of centerline, up to 92' AGL/112' MSL.
Vehicles on road beginning 207' from DER, 231' right of centerline, up to 15' AGL/29' MSL.
Tree 317' from DER, 183' right of centerline, 24' AGL/31' MSL.
Trees 775' from DER, 54' right of centerline, up to 61' AGL/71' MSL.
Multiple trees beginning 1085' from DER, 698' right of centerline, up to 88' AGL/98' MSL.
Multiple trees beginning 1696' from DER, 1' right of centerline, up to 85' AGL/95' MSL.
Numerous trees beginning 2128' from DER, 1' right of centerline, up to 103' AGL/113' MSL.
Multiple trees beginning 3955' from DER, 936' right of centerline, up to 124' AGL/134' MSL.
Vehicles on road beginning 265' from DER, on centerline, up to 15' AGL/26' MSL.
Tree 9' from DER, 414' left of centerline, 25' AGL/35' MSL.

CON'T

22 FEB 2024 to 21 MAR 2024
22 FEB 2024 to 21 MAR 2024

NORFOLK, VA (CON'T)

NORFOLK INTL (ORF) (CON'T)

Rwy 32 (CON'T), tree 166' from DER, 264' left of centerline, 17' AGL/27' MSL.
Towers beginning 201' from DER, 86' left of centerline, 12' AGL/27' MSL.
Vehicle on road 217' from DER, 81' left of centerline, 10' AGL/27' MSL.
Trees beginning 677' from DER, 568' left of centerline, up to 60' AGL/70' MSL.
Trees beginning 764' from DER, 109' left of centerline, up to 40' AGL/47' MSL.
Poles beginning 846' from DER, 223' left of centerline, up to 41' AGL/51' MSL.
Multiple trees beginning 1110' from DER, 181' left of centerline, up to 49' AGL/59' MSL.
Tree 1359' from DER, 817' left of centerline, 93' AGL/103' MSL.
Multiple trees located 1566' from DER, 7' left of centerline, up to 85' AGL/95' MSL.
Trees beginning 3528' from DER, 186' left of centerline, up to 106' AGL/113' MSL.

NORFOLK NS (CHAMBERS FLD) (KNGU)

NORFOLK, VA
TAKEOFF MINIMUMS AND (OBSTACLE) DEPARTURE PROCEDURES
AMDT 4 26JAN23 (23026) (USN)

TAKEOFF MINIMUMS:
Rwy 10, ATC restriction to de-conflict with ORF traffic, std. w/min. CG 400' per NM to 500' MSL, if unable advise ATC, then 300-1.
Rwy 28, 500-2¼, or std. w/min. climb of 240' per NM to 700.

TAKEOFF OBSTACLE NOTES:
Rwy 10, trees with a maximum height of 120' within 2500' of DER.
Rwy 28, cranes 1.3 NM from DER, 1600' left to 2000' right of centerline, 215' MSL.
Cranes 1.3 NM from DER, 2000' to 4000' right of centerline, 245' MSL.
Twr 2323' from DER, 745' left of centerline, 70' AGL/72' MSL.

NORFOLK NS HELIPORT (KNHU)

NORFOLK, VA
TAKEOFF MINIMUMS AND (OBSTACLE) DEPARTURE PROCEDURES
AMDT 1 30NOV23 (23334) (USN)

TAKEOFF MINIMUMS:
H01, std w/min climb of 500'/NM to 500.

DEPARTURE PROCEDURE:
Diverse departures NA.

OAKLAND, MD

GARRETT COUNTY (2G4)
TAKEOFF MINIMUMS AND (OBSTACLE) DEPARTURE PROCEDURES
ORIG 10APR08 (08101) (FAA)

TAKEOFF OBSTACLE NOTES:
Rwy 9, Multiple trees beginning 75' from DER, 94' left of centerline, up to 100' AGL/2939' MSL.
Multiple trees beginning 76' from DER, 47' right of centerline, up to 100' AGL/2939' MSL.
Rwy 27, Multiple trees beginning 15' from DER, 334' left of centerline, up to 100' AGL/3019' MSL.
Multiple trees beginning 19' from DER, 107' right of centerline, up to 100' AGL/3019' MSL.

OCEAN CITY, MD

OCEAN CITY MUNI (OXB)
TAKEOFF MINIMUMS AND (OBSTACLE) DEPARTURE PROCEDURES
AMDT 4 30NOV23 (23334) (FAA)

TAKEOFF MINIMUMS:
Rwy 2, 300-1 or std w/min climb of 275'/NM to 300.
Rwy 32, 400-2 or std w/min climb of 275'/NM to 500.

TAKEOFF OBSTACLE NOTES:
Rwy 2, light poles 9' from DER, 16' right of centerline, 2' AGL/13' MSL.
Light poles 9' from DER, 16' left of centerline, 2' AGL/13' MSL.
Tree 1008' from DER, 554' right of centerline, 66' MSL.
Trees beginning 1029' from DER, 518' left of centerline, up to 104' MSL.
Trees, pole beginning 1096' from DER, 442' right of centerline, up to 77' MSL.
Trees, pole beginning 1163' from DER, 17' left of centerline, up to 107' MSL.
Trees beginning 1373' from DER, 173 ' right of centerline, up to 92' MSL.
Tree 1633' from DER, 389' right of centerline, 93' MSL.
Trees beginning 1649' from DER, 25' right of centerline, up to 99' MSL.
Trees beginning 2907' from DER, 39' right of centerline, up to 109 ' MSL.
Trees beginning 3238' from DER, 56' right of centerline, up to 114' MSL.
Tank 4707' from DER, 1599' right of centerline, 160' AGL/169' MSL.
Water tower, tower beginning 4707' from DER, 1598' right of centerline, up to 162' AGL/170' MSL.
CON'T

OCEAN CITY, MD (CON'T)

OCEAN CITY MUNI (OXB) (CON'T)

Rwy 20, trees beginning at DER, 216' right of centerline, up to 52' MSL.
Tree 179' from DER, 476' left of centerline, 33' MSL.
Tree 187' from DER, 518' left of centerline, 43' MSL.
Trees beginning 332' from DER, 457' left of centerline, up to 48' MSL.
Trees beginning 596' from DER, 298' left of centerline, up to 56' MSL.
Trees beginning 604' from DER, 224' right of centerline, up to 56' MSL.
Trees beginning 1267' from DER, 620' right of centerline, up to 76' MSL.
Trees beginning 1420' from DER, 3' right of centerline, up to 80' MSL.
Tree 1722' from DER, 250' left of centerline, 63' MSL.
Rwy 32, tree 353' from DER, 550' left of centerline, 52' MSL.
Tree, pole beginning 557' from DER, 544' left of centerline, up to 58' MSL.
Poles beginning 725' from DER, 492' left of centerline, up to 50' AGL/61' MSL.
Tree 1214' from DER, 73' right of centerline, 72' MSL.
Trees beginning 1236' from DER, 139' left of centerline, up to 78' MSL.
Tree 1252' from DER, 257' right of centerline, 83' MSL.
Trees beginning 1339' from DER, 66' right of centerline, up to 100' MSL.
Trees beginning 1355' from DER, 551' left of centerline, up to 80' MSL.
Tree, pole beginning 1384' from DER, 65' left of centerline, up to 82' MSL.
Trees beginning 1432' from DER, 180' left of centerline, up to 86' MSL.
Trees beginning 1477' from DER, 53' right of centerline, up to 107' MSL.
Tree 1563' from DER, 374' left of centerline, 89' MSL.
Trees beginning 1564' from DER, 5' left of centerline, up to 92' MSL.
Trees beginning 1682' from DER, 63' left of centerline, up to 105' MSL.
Antenna, tower beginning 1.6 NM from DER, 928' right of centerline, up to 352' AGL/358' MSL.

OCEANA NAS (APOLLO SOUCEK FLD) (KNTU)

VIRGINIA BEACH, VA

TAKEOFF MINIMUMS AND (OBSTACLE) DEPARTURE PROCEDURES

AMDT 4 27JAN22 (22083) (USN)

TAKEOFF OBSTACLE NOTES:

Rwy 5L, trees 3707' from DER, 98' right of centerline, 91' AGL/114' MSL.
Rwy 5R, trees 3706' from DER, 602' left of centerline, 91' AGL/114' MSL.
Trees 966' from DER, 598' right of centerline, 0' AGL/47' MSL.
Rwy 14R, trees 286' from DER, 527' right of centerline, 45' MSL.
Rwy 32L, terrain 0' from DER, 500' left of centerline, 20' MSL.
Trees 2792' from DER, 6' left of centerline, 89' AGL/104' MSL.
Rwy 32R, terrain 0' from DER, 484' right of centerline, 20' MSL.
Trees 2791' from DER, 709' left of centerline, 89' AGL/104' MSL.

ORANGE, VA

ORANGE COUNTY (OMH)

TAKEOFF MINIMUMS AND (OBSTACLE) DEPARTURE PROCEDURES

AMDT 1 29MAY14 (14149) (FAA).

DEPARTURE PROCEDURE:

Rwy 8, climb heading 075° to 1500 before turning left.
Rwy 26, climb heading 255° to 2000 before turning.

TAKEOFF OBSTACLE NOTES:

Rwy 8, terrain, trees and poles beginning 103' from DER, 361' right of centerline, up to 126' AGL/576' MSL.
Terrain, trees and poles beginning 404' from DER, 600' left of centerline, up to 101' AGL/581' MSL.
Rwy 26, terrain, trees, and poles beginning 14' from DER, 429' right of centerline, up to 101' AGL/559' MSL.
Vehicle on road 378' from DER, 406' right of centerline, 17' AGL/463' MSL.
Terrain, trees, poles, building and catenary beginning 101' from DER, 888' left of centerline, up to 102' AGL/522' MSL.

PATUXENT RIVER NAS (TRAPNELL FIELD) (KNHK)

PATUXENT RIVER, MD

TAKEOFF MINIMUMS AND (OBSTACLE)DEPARTURE PROCEDURES

02DEC21 (21336) (USN)

TAKEOFF OBSTACLE NOTES:

Rwy 2, tower 2280' from DER, 57' right of centerline, 71' AGL/92' MSL.
Twr 2315' from DER, 9' left of centerline, 62' AGL/83' MSL.
Twr 2333' from DER, 226' right of centerline, 72' AGL/92' MSL.
Twr 2370' from DER, 26' right of centerline, 72' AGL/99' MSL.
Twr 2399' from DER, 261' right of centerline, 64' AGL/83' MSL.
Twr 2433' from DER, 195' right of centerline, 72' AGL/92' MSL.
Rwy 6, pylon 1977' from DER, 979' left of centerline, 63' AGL/83' MSL.
Rwy 14, tree 271' from DER, 572'left of centerline, 79' AGL/87'MSL.
Rwy 20, pylon 3860' from DER, 1431' left of centerline, 52' AGL/103' MSL.
Pylon 4420' from DER, 772' left of centerline, 52' AGL/114' MSL.
Rwy 24, terrain 1.0 NM from DER, 1839' left of centerline, 212' MSL.
Twr, 3' from DER, 259' right of centerline, 2' AGL/47' MSL.

22 FEB 2024 to 21 MAR 2024
22 FEB 2024 to 21 MAR 2024

PETERSBURG, VA
TRI CITIES EXEC/DINWIDDIE COUNTY (PTB)
TAKEOFF MINIMUMS AND (OBSTACLE) DEPARTURE PROCEDURES
AMDT 1 25APR19 (22363) (FAA)
TAKEOFF OBSTACLE NOTES:
Rwy 5, fence 160' from DER, 472' right of centerline, 13' AGL/196' MSL.
Tree 910' from DER, 705' left of centerline, 244' MSL.
Tree 1855' from DER, 551' left of centerline, 252' MSL.
Tree 2342' from DER, 600' left of centerline, 254' MSL.
Rwy 23, fence 10' from DER, 475' left of centerline, 10' AGL/199' MSL.
Tree 819' from DER, 658' left of centerline, 253' MSL.
Tree 1040' from DER, 643' left of centerline, 265' MSL.
Tree 1452' from DER, 802' left of centerline, 276' MSL.
Trees beginning 2614' from DER, 534' right of centerline, up to 276' MSL.
Trees beginning 3145' from DER, 69' right of centerline, up to 289' MSL.
Tree 3151' from DER, 527' left of centerline, 281' MSL.

PHILLIPS AAF (KAPG)
ABERDEEN PROVING GROUND, MD
TAKEOFF MINIMUMS AND (OBSTACLE) DEPARTURE PROCEDURES
AMDT 1 15JUN23 (23166) (USA)
TAKEOFF OBSTACLE NOTES:
Rwy 4, vehicle on road 1059' from DER, on centerline, 10' AGL/86' MSL.
Rwy 22, vehicle on road 234' from DER, 27' right of centerline, 10' AGL/49' MSL.

QUANTICO MCAF (TURNER FLD) (KNYG)
QUANTICO, VA
TAKEOFF MINIMUMS AND (OBSTACLE) DEPARTURE PROCEDURES
AMDT 2 03NOV22 (22307) (USN)
DEPARTURE PROCEDURE:
Rwy 2, diverse departures authorized only from 026° CW to 205° std. w/min. civil climb of 302' per NM to 600, min. military climb of 277' per NM to 500.
TAKEOFF OBSTACLE NOTES:
Rwy 2, terrain 5117' from DER, 1871' left of centerline, 151' MSL.
Terrain 5470' from DER, 1723' left of centerline, 157' MSL.
Camera pole 115' from DER, 192' left of centerline, 23' MSL.
Light pole 158' from DER, 297' left of centerline, 30' MSL.
Light pole 173' from DER, 349' left of centerline, 30' MSL.
Light pole 186' from DER, 398' left of centerline, 31' MSL.
Light pole 216' from DER, 280' left of centerline, 30' MSL.
Light pole 273' from DER, 265' left of centerline, 30' MSL.
Light pole 288' from DER, 315' left of centerline, 30' MSL.
Light pole 302' from DER, 366' left of centerline, 31' MSL.
Light pole 3078' from DER, 1139' left of centerline, 116' MSL.
Light pole 2314' from DER, 876' left of centerline, 61' AGL/94' MSL.
Top of brush 1025' from DER, 96' left of centerline, 42' MSL.
Top of brush 1249' from DER, 209' left of centerline, 42' MSL.
Top of brush 909' from DER, 91' right of centerline, 43' MSL.
Top of brush 967' from DER, 123' right of centerline, 43' MSL.
Tree 806' from DER, 344' left of centerline, 50' MSL.
Tree 821' from DER, 302' left of centerline, 52' MSL.
Tree 875' from DER, 318' left of centerline, 51' MSL.
Bldg corner 101' from DER, 413' left of centerline, 22' MSL.
Bldg corner 104' from DER, 420' left of centerline, 19' MSL.
Bldg corner 115' from DER, 459' left of centerline, 19' MSL.
Bldg corner 123' from DER, 260' left of centerline, 20' MSL.
Bldg corner 161' from DER, 397' left of centerline, 20' MSL.
Bldg corner 163' from DER, 404' left of centerline, 19' MSL.
Bldg corner 174' from DER, 443' left of centerline, 19' MSL.
Bldg corner 57' from DER, 466' left of centerline, 25' MSL.
Bldg corner 64' from DER, 276' left of centerline, 22' MSL.
Bldg corner 97' from DER, 455' left of centerline, 25' MSL.
Bldg peak 135' from DER, 411' left of centerline, 26' MSL.
Bldg peak 145' from DER, 451' left of centerline, 26' MSL.
Rwy 20, terrain 0' from DER, 419' right of centerline, 39' MSL.
Terrain 0' from DER, 500' right of centerline, 40' MSL.
Camera pole 9' from DER, 457' right of centerline, 29' MSL.
Electric box 7' from DER, 283' right of centerline, 13' MSL.
Jetty 393' from DER, 273' right of centerline, 27' MSL.
Top of brush 287' from DER, 439' right of centerline, 33' MSL.

22 FEB 2024 to 21 MAR 2024
22 FEB 2024 to 21 MAR 2024

QUANTICO MCAF (TURNER FLD) (KNYG) (CON'T)

QUANTICO, VA (CON'T

DIVERSE VECTOR AREA (RADAR VECTORS)

AMDT 1 03NOV22 (22307) (USN)

Rwy 2, hdgs as assigned by ATC; requires min. civilian climb of 301' per NM to 500, min. military climb of 301' per NM to 700.

QUINTON, VA

NEW KENT COUNTY (W96)

TAKEOFF MINIMUMS AND (OBSTACLE) DEPARTURE PROCEDURES

AMDT 2 19SEP13 (13262) (FAA)

TAKEOFF OBSTACLE NOTES:

Rwy 11, trees beginning abeam DER, 189' right of centerline, up to 100' AGL/199' MSL.
Trees beginning abeam DER, 113' left of centerline, up to 100' AGL/209' MSL.
Trees beginning 257' from DER, left and right of centerline, up to 100' AGL/199' MSL.
Rwy 29, trees beginning abeam DER, 183' right of centerline, up to 100' AGL/189' MSL.
Trees beginning abeam DER, 209' left of centerline, up to 100' AGL/219' MSL.
Fence 246' from DER, 8' AGL/127' MSL.
Trees beginning 247' from DER, 153' right of centerline up to 100' AGL/199' MSL.
Vehicles on roadway 269' from DER, left and right of centerline, 15' AGL/134' MSL.
Trees beginning 396' from DER, 5' right of centerline, up to 100' AGL/239' MSL.

RICHLANDS, VA

TAZEWELL COUNTY (JFZ)

TAKEOFF MINIMUMS AND (OBSTACLE) DEPARTURE PROCEDURES

AMDT 1 15DEC11 (11349) (FAA)

TAKEOFF MINIMUMS:

Rwy 7, std. w/min. climb of 630' per NM to 3200 or 300-1½ w/ min. climb of 235' per NM to 5000 or 2000-2½ for climb in visual conditions.
Rwy 25, std. w/min. climb of 713' per NM to 2900 or 300-1 w/ min. climb of 220' per NM to 5000 or 2000-2 ½ for climb in visual conditions.

DEPARTURE PROCEDURE:

Rwy 7, climb heading 072° to 5000 before proceeding on course, or for climb in visual conditions: cross Tazewell County airport at or above 4500 before proceeding on course. When executing VCOA, notify ATC prior to departure.
Rwy 25, climb heading 252° to 5000 before proceeding on course or for climb in visual conditions: cross Tazewell County airport at or above 4500 before proceeding on course. When executing VCOA, notify ATC prior to departure.

TAKEOFF OBSTACLE NOTES:

Rwy 7, rising terrain beginning at DER, left and right of centerline, up to 2773' MSL.
Vehicles on road beginning at DER, 425' right of centerline, up to 15' AGL/2682' MSL.
Trees beginning at DER, left and right of centerline, up to 100' AGL/2939' MSL.
Rwy 25, trees beginning 116' from DER, left and right of centerline, up to 100' AGL/2828' MSL.
DME facility 176' from DER, 256' left of centerline, 28' AGL/2668' MSL.
Fence beginning 566' from DER, 363' left of centerline, up to 10' AGL/2734' MSL.
Rising terrain beginning 620' from DER, 361' left of centerline, up to 2669' MSL.

RICHMOND, VA

RICHMOND EXEC/CHESTERFIELD COUNTY (FCI)

TAKEOFF MINIMUMS AND (OBSTACLE) DEPARTURE PROCEDURES

AMDT 4 02MAY13 (21336) (FAA)

DEPARTURE PROCEDURE:

Rwy 33, climb heading 316° to 2000 before turning right.

TAKEOFF OBSTACLE NOTES:

Rwy 15, vehicles on roadway and trees beginning abeam DER, 260' right of centerline, up to 59' AGL/260' MSL.
Trees beginning 99' from DER, 266' left of centerline, up to 57' AGL/258' MSL.
Rwy 33, rising terrain, trees and pole beginning 62' from DER, 29' right of centerline, up to 37' AGL/278' MSL.
Trees beginning 1844' from DER, 660' left of centerline, up to 95' AGL/306' MSL.

22 FEB 2024 to 21 MAR 2024
22 FEB 2024 to 21 MAR 2024

RICHMOND, VA (CON'T)

RICHMOND INTL (RIC)

TAKEOFF MINIMUMS AND (OBSTACLE) DEPARTURE PROCEDURES

AMDT 3 05DEC19 (19339) (FAA)

TAKEOFF MINIMUMS:

Rwy 2, 300-1¼ or std. w/min. climb of 230' per NM to 400, or alternatively, with std. takeoff minimums and a normal 200' per NM climb gradient, takeoff must occur no later than 1700' prior to DER.

TAKEOFF OBSTACLE NOTES:

Rwy 2, lighting 40' from DER, 115' left of centerline, 4' AGL/168' MSL.
Lighting 40' from DER, 115' right of centerline, 3' AGL/168' MSL.
Sign, lighting beginning 47' from DER, 204' right of centerline, up to 4' AGL/169' MSL.
Tree 2340' from DER, 335' left of centerline, 224' MSL.
Tree 2360' from DER, 327' left of centerline, 229' MSL.
Trees beginning 2377' from DER, 316' left of centerline, up to 235' MSL.
Tree 2460' from DER, 813' right of centerline, 232' MSL.
Trees beginning 2483' from DER, 201' left of centerline, up to 236' MSL.
Trees beginning 2540' from DER, 993' right of centerline, up to 241' MSL.
Tree 2557' from DER, 959' right of centerline, 245' MSL.
Trees beginning 2623' from DER, 42' right of centerline, up to 253' MSL.
Trees beginning 2643' from DER, 1' left of centerline, up to 249' MSL.
Trees beginning 2916' from DER, 17' right of centerline, up to 259' MSL.
Trees beginning 3051' from DER, 37' left of centerline, up to 251' MSL.
Trees beginning 3135' from DER, 357' right of centerline, up to 263' MSL.
Trees beginning 3382' from DER, 462' right of centerline, up to 270' MSL.
Trees beginning 3385' from DER, 119' right of centerline, up to 275' MSL.
Tree 3428' from DER, 368' left of centerline, 252' MSL.
Tower 5423' from DER, 1710' left of centerline, 157' AGL/321' MSL.
Rwy 16, lighting 2' from DER, 80' right of centerline, 2' AGL/161' MSL.
Lighting 2' from DER, 80' left of centerline, 2' AGL/161' MSL.
Trees beginning 1671' from DER, 776' right of centerline, up to 214' MSL.
Tree 2873' from DER, 1218' left of centerline, 241' MSL.
Rwy 20, lighting 3' from DER, 5' right of centerline, 1' AGL/160' MSL.
Lighting 4' from DER, 4' left of centerline, 1' AGL/160' MSL.
Building 724' from DER, 680' right of centerline, 35' AGL/195' MSL.
Building 816' from DER, 654' right of centerline, up to 53' AGL/212' MSL.
Tree 2304' from DER, 1111' right of centerline, 219' MSL.
Trees beginning 2367' from DER, 986' left of centerline, up to 241' MSL.
Trees beginning 2567' from DER, 724' right of centerline, up to 253' MSL.
Tree 2616' from DER, 1189' right of centerline, 257' MSL.
Tree, pole beginning 2637' from DER, 281' right of centerline, up to 264' MSL.
Trees beginning 3013' from DER, 1046' left of centerline, up to 251' MSL.
Rwy 34, lighting beginning 1' from DER, 4' left of centerline, up to 1' AGL/168' MSL.
Terrain 3' from DER, 6' right of centerline, 167' MSL.
Sign 40' from DER, 413' right of centerline, 3' AGL/168' MSL.
Pole 1262' from DER, 732' left of centerline, 41' AGL/200' MSL.
Tree 2256' from DER, 1090' right of centerline, 231' MSL.
Trees beginning 2458' from DER, 952' left of centerline, up to 240' MSL.
Tree 2602' from DER, 998' left of centerline, 250' MSL.
Tree 2604' from DER, 1172' left of centerline, 251' MSL.
Trees beginning 2674' from DER, 952' left of centerline, up to 252' MSL.

RICHMOND/ASHLAND, VA

HANOVER COUNTY MUNI (OFP)

TAKEOFF MINIMUMS AND (OBSTACLE) DEPARTURE PROCEDURES

AMDT 1 30JAN20 (20030) (FAA)

TAKEOFF OBSTACLE NOTES:

Rwy 34, tree 410' from DER, 567' left of centerline, 278' MSL.
Tree 1125' from DER, 750' left of centerline, 279' MSL.
Trees beginning 1402' from DER, 445' right of centerline, up to 290' MSL.
Tree 1502' from DER, 774' left of centerline, 292' MSL.
Trees beginning 1836' from DER, 739' left of centerline, up to 293' MSL.
Trees beginning 2731' from DER, 487' right of centerline, up to 304' MSL.

RIDGELY, MD

GOODEN AIRPARK (RJD)

TAKEOFF MINIMUMS AND (OBSTACLE) DEPARTURE PROCEDURES

ORIG 02AUG07 (21168) (FAA)

TAKEOFF OBSTACLE NOTES:

Rwy 12, multiple trees beginning 592' from DER, 6' left of centerline, up to 100' AGL/160' MSL.
Multiple trees beginning 239' from DER, 338' right of centerline, up to 100' AGL/160' MSL.

22 FEB 2024 to 21 MAR 2024
22 FEB 2024 to 21 MAR 2024

ROANOKE, VA

ROANOKE/BLACKSBURG RGNL (WOODRUM FLD) (ROA)

TAKEOFF MINIMUMS AND (OBSTACLE) DEPARTURE PROCEDURES

AMDT 11A 15AUG19 (22027) (FAA)

TAKEOFF MINIMUMS:

Rwy 6, std. w/min. climb of 585' per NM to 3000 or 2600-3 for climb in visual conditions.
Rwy 16, std. w/min. climb of 340' per NM to 3300 or 2600-3 for climb in visual conditions.
Rwy 24, std. w/min. climb of 365' per NM to 5100, or 2600-3 for climb in visual conditions.
Rwy 34, NA-Obstacles.

DEPARTURE PROCEDURE:

Rwy 6, climb on heading 058° to 3200 before proceeding on course.
Rwy 16, climb on heading 156° to 3000 before proceeding on course.
Rwy 24, climb on heading 238° to 3000 before proceeding on course.

VCOA:

Obtain ATC approval for VCOA when requesting IFR clearance. Climb in visual conditions to cross Roanoke/Blacksburg Rgnl (Woodrum Fld) at or above 3600 before proceeding on course.

TAKEOFF OBSTACLE NOTES:

Rwy 6, trees and bushes beginning 88' from DER, 340' right of centerline, up to 59' AGL/1159' MSL.
Trees 238' from DER, 540' right of centerline, up to 71' AGL/1171' MSL.
Trees beginning 1536' from DER, 298' right of centerline, up to 100' AGL/1219' MSL.
Trees beginning 2.7 NM from DER, 2645' left of centerline, up to 84' AGL/1864' MSL.
Trees beginning 2.8 NM from DER, 2912' left of centerline, up to 51' AGL/2271' MSL.
Towers beginning 2.9 NM from DER, 3455' left of centerline, up to 216' AGL/2407' MSL.
Rwy 16, sign 40' from DER, 252' left of centerline, 18' AGL/1144' MSL.
Trees on hilltop 1.1 NM from DER, 2211' left of centerline, up to 56' AGL/1336' MSL.
Rwy 24, sign 42' from DER, 249' left of centerline, 13' AGL/1154' MSL.
Tree 2872' from DER, 1246' left of centerline, 92' AGL/1232' MSL.

SALISBURY, MD

SALISBURY-OCEAN CITY WICOMICO RGNL (SBY)

TAKEOFF MINIMUMS AND (OBSTACLE) DEPARTURE PROCEDURES

AMDT 1 18NOV10 (10322) (FAA)

TAKEOFF OBSTACLE NOTES:

Rwy 5, terrain and trees beginning 21' from DER, right and left of centerline, up to 100' AGL/148' MSL.
Poles beginning 1213' from DER, 664' right of centerline, up to 36' AGL/85' MSL.
Antenna on building 1388' from DER, 49' left of centerline, 36' AGL/86' MSL.
Rwy 14, trees beginning 1539' from DER, right and left of centerline, up to 100' AGL/153' MSL.
Rwy 23, trees beginning 22' from DER, right and left of centerline, up to 100' AGL/163' MSL.
Vehicles on road beginning 220' from DER, right and left of centerline, up to 17' AGL/60' MSL.
Antenna on building 1141' from DER, 304' right of centerline, 47' AGL/83' MSL.
Rwy 32, trees beginning 14' from DER, right and left of centerline, up to 100' AGL/134' MSL.
Hangars beginning 121' from DER, 510' left of centerline, up to 23' AGL/72' MSL.
Trailer 396' from DER, 275' left of centerline, 10' AGL/59' MSL.

SALUDA, VA

HUMMEL FLD (W75)

TAKEOFF MINIMUMS AND (OBSTACLE) DEPARTURE PROCEDURES

AMDT 2A 15JUN23 (23166) (FAA)

TAKEOFF MINIMUMS:

Rwy 19, 300-2 or std. w/min. climb of 295' per NM to 500.

TAKEOFF OBSTACLE NOTES:

Rwy 1, tree 193' from DER, 347' right of centerline, 100' AGL/27' MSL.
Trees beginning 209' from DER, 106' right of centerline, up to 100' AGL/30' MSL.
Trees beginning 226' from DER, 72' left of centerline, up to 100' AGL/30' MSL.
Trees beginning 1167' from DER, 10' left of centerline, up to 100' AGL/40' MSL.
Trees beginning 1976' from DER, 9' right of centerline, up to 100' AGL/43' MSL.
Rwy 19, terrain+veg, transmission_line beginning 29' from DER, 25' right of centerline, up to 100' AGL/140' MSL.
Terrain+veg, building beginning 62' from DER, 120' left of centerline, up to 100' AGL/137' MSL.
Terrain+veg, transmission_line beginning 1003' from DER, 38' left of centerline, up to 100' AGL/140' MSL.
Terrain+veg beginning 2115' from DER, 2' right of centerline, up to 100' AGL/143' MSL.
Terrain+veg beginning 2214' from DER, 17' left of centerline, up to 100' AGL/143' MSL.
Terrain+veg beginning 3007' from DER, 64' right of centerline, up to 100' AGL/150' MSL.
Terrain+veg beginning 3425' from DER, 437' left of centerline, up to 100' AGL/146' MSL.
Terrain+veg 3474' from DER, 1160' left of centerline, 100' AGL/150' MSL.
Terrain+veg beginning 3490' from DER, 135' left of centerline, up to 100' AGL/160' MSL.
Terrain+aao 1.5 NM from DER, 2885' right of centerline, 279' AGL/200' MSL.
Terrain+aao beginning 1.6 NM from DER, 2665' right of centerline, up to 279' AGL/200' MSL.

SOUTH BOSTON, VA

WILLIAM M TUCK (W78)

TAKEOFF MINIMUMS AND (OBSTACLE) DEPARTURE PROCEDURES

AMDT 3B 14JUL22 (22195) (FAA)

TAKEOFF MINIMUMS:

Rwy 1, 300-1.

Rwys 6, 24, NA.

TAKEOFF OBSTACLE NOTES:

Rwy 1, tree, terrain beginning 17' from DER, 352' right of centerline, up to 470' MSL.
Tree, terrain, antenna, building beginning 52' from DER, 359 ' right of centerline, up to 484' MSL.
Vegetation beginning 111' from DER, 188' left of centerline, up to 432' MSL.
Vegetation beginning 138' from DER, 225' left of centerline, up to 434' MSL.
Trees beginning 197' from DER, 481' right of centerline, up to 487' MSL.
Trees, terrain, buildings beginning 240' from DER, 115' right of centerline, up to 496' MSL.
Vegetation 300' from DER, 329' left of centerline, 435' MSL.
Tower, trees, building, vegetation beginning 334' from DER, 230' left of centerline, up to 72' AGL/501' MSL.
Tree 536' from DER, 537' right of centerline, 504' MSL.
Trees, terrain, poles, vehicles on roads, building beginning 550' from DER, 6' right of centerline, up to 510' MSL.
Trees, vegetation, pole beginning 846' from DER, 26' left of centerline, up to 505' MSL.
Tree, pole, vegetation, vehicles on roads beginning 921' from DER, 7' left of centerline, up to 518' MSL.
Trees, poles beginning 1352' from DER, 42' left of centerline, up to 522' MSL.
Trees beginning 2423' from DER, 749' right of centerline, up to 513' MSL.
Trees beginning 2554' from DER, 802' right of centerline, up to 518' MSL.
Tree 2679' from DER, 832' right of centerline, 519' MSL.
Trees beginning 2733' from DER, 708' right of centerline, up to 525' MSL.
Tree 2741' from DER, 1163' left of centerline, 528' MSL.
Trees beginning 2801' from DER, 67' left of centerline, up to 536' MSL.
Trees beginning 2857' from DER, 663' right of centerline, up to 527' MSL.
Trees beginning 2996' from DER, 335' right of centerline, up to 532' MSL.
Trees beginning 3111' from DER, 1168' left of centerline, up to 538' MSL.
Trees beginning 3147' from DER, 544' left of centerline, up to 553' MSL.
Trees beginning 3255' from DER, 948' left of centerline, up to 555' MSL.
Trees beginning 3275' from DER, 535' left of centerline, up to 561' MSL.
Rwy 19, tree 39' from DER, 307' right of centerline, 405' MSL.
Trees beginning 42' from DER, 278' right of centerline, up to 411' MSL.
Trees beginning 415' from DER, 337' right of centerline, up to 430' MSL.
Trees beginning 457' from DER, 337' right of centerline, up to 433' MSL.
Trees beginning 509' from DER, 451' left of centerline, up to 398' MSL.
Tree 694' from DER, 454' left of centerline, 403' MSL.

SOUTH HILL, VA

MECKLENBURG-BRUNSWICK RGNL (AVC)

TAKEOFF MINIMUMS AND (OBSTACLE) DEPARTURE PROCEDURES

AMDT 2 29JUL10 (10210) (FAA)

TAKEOFF OBSTACLE NOTES:

Rwy 1, train on tracks 118' from DER, 514' left of centerline, 23' AGL/452' MSL.
Trees beginning 181' from DER, 408' left of centerline, up to 80' AGL/500' MSL.
Trees beginning 1858' from DER, 600' right of centerline, up to 71' AGL/500' MSL.
Rwy 19, trees beginning 191' from DER, 13' left of centerline, up to 77' AGL/457' MSL.
Trees beginning 1176' from DER, 57' right of centerline, up to 76' AGL/500' MSL.

STAFFORD, VA

STAFFORD RGNL (RMN)

TAKEOFF MINIMUMS AND (OBSTACLE) DEPARTURE PROCEDURES

AMDT 1 22AUG13 (13234) (FAA)

TAKEOFF MINIMUMS:

Rwy 33, 300-2 or std. w/min. climb of 304' per NM to 700.

DEPARTURE PROCEDURE:

Rwy 15, climbing left turn to 2000 on BRV R-310 direct BRV VORTAC before proceeding on course.
Rwy 33, climbing left turn to 2000 on BRV R-306 direct BRV VORTAC before proceeding on course.

TAKEOFF OBSTACLE NOTES:

Rwy 15, approach light, 8' from DER, 9' right of centerline, 2' AGL/174' MSL.
Multiple trees beginning 183' from DER, 598' left of centerline, up to 100' AGL/323' MSL.
Multiple trees beginning 2197' from DER, 912' right of centerline, up to 100' AGL/274' MSL.
Rwy 33, REIL, 40' from DER, 123' right of centerline, 2' AGL/214' MSL.
REIL, 40' from DER, 123' left of centerline, 2' AGL/214' MSL.
Tower, 9344' from DER, 420' left of centerline, 168' AGL/529' MSL.
Tower, 9312' from DER, 357' left of centerline, 151' AGL/467' MSL.
Multiple trees, beginning 978' from DER, 10' left of centerline, up to 100' AGL/245' MSL.
Multiple trees, beginning 234' from DER, 100' right of centerline, up to 100' AGL/384' MSL.

STAUNTON-WAYNESBORO-HARRISONBURG, VA

SHENANDOAH VALLEY RGNL (SHD)

TAKEOFF MINIMUMS AND (OBSTACLE) DEPARTURE PROCEDURES

AMDT 6A 11AUG22 (22223) (FAA)

TAKEOFF MINIMUMS:

Rwy 5, std. w/min. climb of 285' per NM to 3800 or 2200-3 for VCOA.

Rwy 23, std. or 2200-3 for VCOA.

DEPARTURE PROCEDURE:

Rwy 5, climb heading 047° to 3400 before turning right.

Rwy 23, climb heading 227° to 4400 before proceeding on course.

VCOA:

Rwys 5, 23 obtain ATC approval for VCOA when requesting IFR clearance. Climb in visual conditions to cross Shenandoah Valley Rgnl airport at or above 3300 before proceeding on course.

TAKEOFF OBSTACLE NOTES:

Rwy 5, tree 1812' from DER, 971' right of centerline, 1247' MSL.
Tree 1887' from DER, 893' right of centerline, 1253' MSL.
Tree 2052' from DER, 1025' right of centerline, 1257' MSL.
Tree 2159' from DER, 928' right of centerline, 1259' MSL.
Tree 2271' from DER, 928' right of centerline, 1265' MSL.

Rwy 23, general utility 11' from DER, 98' right of centerline, 3' AGL/1176' MSL.
Tree 595' from DER, 647' left of centerline, 1195' MSL.
Tree 693' from DER, 620' left of centerline, 1216' MSL.
Tree 807' from DER, 647' left of centerline, 1222' MSL.
Trees beginning 920' from DER, 597' left of centerline, up to 60' AGL/1231' MSL.
Tree 1115' from DER, 670' left of centerline, 57' AGL/1237' MSL.
Trees beginning 1198' from DER, 497' left of centerline, up to 57' AGL/1240' MSL.
Tree 3379' from DER, 1394' left of centerline, 1266' MSL.
Tree 5409' from DER, 1586' left of centerline, 1310' MSL.
Tree 5523' from DER, 1521' left of centerline, 1317' MSL.

STEVENSVILLE, MD

BAY BRIDGE (W29)

TAKEOFF MINIMUMS AND (OBSTACLE) DEPARTURE PROCEDURES

AMDT 1 10NOV16 (16315) (FAA)

TAKEOFF MINIMUMS:

Rwy 29, 400-2¾ or std. w/min. climb of 220' per NM to 500.

TAKEOFF OBSTACLE NOTES:

Rwy 11, tree 109' from DER, 513' right of centerline, 71' MSL.
Tree, parking lot, vehicles on road, building, and sign beginning 150' from DER, 23' right of centerline, up to 79' MSL.
Tree 193' from DER, 488' left of centerline, 25' MSL.
Tree 221' from DER, 489' left of centerline, 27' MSL.
Pole and tree beginning 318' from DER, 157' left of centerline, up to 37' MSL.
Tree and vehicles on road beginning 350' from DER, 54' left of centerline, up to 44' MSL.
Pole, vehicles on road, and tree beginning 611' from DER, 120' left of centerline, up to 51' MSL.
Pole and tree beginning 751' from DER, 334' left of centerline, up to 54' MSL.
Pole and tree beginning 876' from DER, 445' left of centerline, up to 83' MSL.
Pole, tree, and building beginning 1195' from DER, 22' left of centerline, up to 87' MSL.
Tree 2141' from DER, 53' left of centerline, 90' MSL.

Rwy 29, windsock 14' from DER, 161' left of centerline, 18' MSL.
Trees beginning 17' from DER, 329' left of centerline, up to 46' MSL.
Tree 93' from DER, 502' left of centerline, 52' MSL.
Bridge 2.2 NM from DER, 3052' right of centerline, 377' AGL/377' MSL.

SUFFOLK, VA

SUFFOLK EXEC (SFQ)

TAKEOFF MINIMUMS AND (OBSTACLE) DEPARTURE PROCEDURES

AMDT 5 02MAY13 (22083) (FAA)

TAKEOFF OBSTACLE NOTES:

Rwy 4, trees beginning 4' from DER, 462' right and 428' left of centerline, up to 100' AGL/173' MSL.
Trees beginning 1052' from DER, 783' right and 554' left of centerline, up to 100' AGL/173' MSL.
Transmission poles and T-L towers beginning 1291' from DER, 600' right of centerline, up to 65' AGL/130' MSL.

Rwy 7, trees beginning 10' from DER, 541' right and 400' left of centerline, up to 100' AGL/161' MSL.
Trees beginning 1004' from DER 689' right of and 1280' left of centerline, up to 100' AGL/160' MSL.
Transmission poles and T-L towers beginning 1152' from DER, right and left of centerline, up to 65' AGL/130' MSL.

Rwy 22, trees beginning 44' from DER, 342' right and 494' left of centerline, up to 100' AGL/174' MSL.
Trees beginning 1005' from DER, 1078' right and 481' left of centerline, up to 100' AGL/174' MSL.
Vehicles on road beginning 483' from DER, right and left of centerline, up to 15' AGL/80' MSL.

Rwy 25, vehicles on road beginning 199' from DER, right and left of centerline, up to 17' AGL/84' MSL.
Trees beginning 231' from DER, right and left of centerline, up to 100' AGL/186' MSL.

22 FEB 2024 to 21 MAR 2024
22 FEB 2024 to 21 MAR 2024

TANGIER, VA

TANGIER ISLAND (TGI)

TAKEOFF MINIMUMS AND (OBSTACLE) DEPARTURE PROCEDURES

ORIG 15JAN09 (09015) (FAA)

TAKEOFF OBSTACLE NOTES:

Rwy 2, vehicle on road 343' from DER, on centerline, 15' AGL/19' MSL.
Boat masts 638' from DER, 632' right to 755' left of centerline, up to 63' MSL.
Rwy 20, buildings beginning 7' from DER, 206' left of centerline, 45' AGL/50' MSL.
Rock wall at DER, 57' right of centerline, 4' AGL/8' MSL.

TAPPAHANNOCK, VA

TAPPAHANNOCK/ESSEX COUNTY (XSA)

TAKEOFF MINIMUMS AND (OBSTACLE) DEPARTURE PROCEDURES

ORIG 25OCT07 (22027) (FAA)

TAKEOFF MINIMUMS:

Rwy 10, 300-1¼ or std. w/min. climb of 303' per NM to 500.
Rwy 28, 300-1 or std. w/min. climb of 366' per NM to 500.

TAKEOFF OBSTACLE NOTES:

Rwy 10, terrain 6' from DER, 20' left of centerline, up to 135' MSL.
Terrain 29' from DER, 281' left of centerline, up to 139' MSL.
Rwy 28, terrain beginning 12' from DER, 5' right of centerline, up to 151' MSL.

WALLOPS ISLAND, VA

WALLOPS FLIGHT FACILITY (WAL)

TAKEOFF MINIMUMS AND (OBSTACLE) DEPARTURE PROCEDURES

ORIG 07MAY09 (09127) (FAA)

TAKEOFF OBSTACLE NOTES:

Rwy 4, trees beginning 1254' from DER, 741' left of centerline, up to 100' AGL/109' MSL.
Trees beginning 1814' from DER, 79' right of centerline, up to 100' AGL/134' MSL.
Rwy 10, trees beginning 1252' from DER, 818' left of centerline, up to 100' AGL/124' MSL.
Rwy 17, trees beginning 169' from DER, 218' left of centerline, up to 100' AGL/119' MSL.
Rwy 22, trees beginning 793' from DER, 315' left of centerline, up to 100' AGL/129' MSL.
Rwy 28, trees beginning 945' from DER, 495' right of centerline, up to 100' AGL/139' MSL.
Rwy 35, trees beginning 3' from DER, 394' left of centerline, up to 100' AGL/124' MSL.
Trees beginning 21' from DER, 219' right of centerline, up to 100' AGL/124' MSL.

WAKEFIELD, VA

WAKEFIELD MUNI (AKQ)

TAKEOFF MINIMUMS AND (OBSTACLE) DEPARTURE PROCEDURES

AMDT 1 17AUG17 (17229) (FAA)

TAKEOFF OBSTACLE NOTES:

Rwy 2, tree, vehicle beginning 54' from DER, 39' left of centerline, up to 183' MSL.
Tree 277' from DER, 83' right of centerline, 119' MSL.
Trees beginning 412' from DER, 41' right of centerline, up to 188' MSL.
Tree 802' from DER, 492' left of centerline, 187' MSL.
Trees beginning 1012' from DER, 117' left of centerline, up to 197' MSL.
Tree 3117' from DER, 210' right of centerline, 191' MSL.
Tree 3203' from DER, 522' right of centerline, 192' MSL.
Rwy 20, pole 16' from DER, 408' left of centerline, 140' MSL.
Tree, building beginning 67' from DER, 18' right of centerline, up to 170' MSL.
Tree, pole, beginning 103' from DER, 72' left of centerline, up to 179' MSL.
Trees beginning 460' from DER, 26' right of centerline, up to 179' MSL.
Tree 1265' from DER, 567' right of centerline, 193' MSL.
Trees beginning 1280' from DER, 499' left of centerline, up to 191' MSL.
Tree 1299' from DER, 463' right of centerline, 198' MSL.
Tree, transmission tower, utility line beginning 1344' from DER, 13' right of centerline, up to 206' MSL.
Tree, transmission tower beginning 1398' from DER, 40' left of centerline, up to 196' MSL.
Trees beginning 3250' from DER, 556' left of centerline, up to 200' MSL.
Tree 3919' from DER, 519' left of centerline, 207' MSL.

WARRENTON, VA

WARRENTON/FAUQUIER (HWY)

TAKEOFF MINIMUMS AND (OBSTACLE) DEPARTURE PROCEDURES

ORIG 09APR09 (22027) (FAA)

TAKEOFF OBSTACLE NOTES:

Rwy 15, trees 436' from DER, 518' right of centerline, 100' AGL/439' MSL.
Vehicle on road 647' from DER, 649' right of centerline, 15' AGL/354' MSL.
Trees 1034' from DER, 763' left of centerline, 100' AGL/449' MSL.
Trees 1924' from DER, 781' right of centerline, 100' AGL/459' MSL.
Trees beginning 2239' from DER, 41' left of centerline, up to 100' AGL/459' MSL.
Rwy 33, trees beginning 1272' from DER, 59' right of centerline, up to 41' AGL/370' MSL.
Trees beginning 2610' from DER, 116' left of centerline, up to 74' AGL/413' MSL.

WASHINGTON, DC

MANASSAS RGNL/HARRY P DAVIS FLD (HEF)

TAKEOFF MINIMUMS AND (OBSTACLE) DEPARTURE PROCEDURES

AMDT 4A 25JUN15 (21112) (FAA)

TAKEOFF OBSTACLE NOTES:

Rwy 16L, trees beginning 1247' from DER, 178' left of centerline, up to 99' AGL/268' MSL.
Trees beginning 1810' from DER, 88' right of centerline, up to 73' AGL/272' MSL.
Trees beginning 2618' from DER, 4' left of centerline, up to 84' AGL/293' MSL.
Trees beginning 3414' from DER, 14' right of centerline, up to 75' AGL/284' MSL.
Trees beginning 3703' from DER, 145' left of centerline, up to 100' AGL/299' MSL.
Trees beginning 4193' from DER, 1343' left of centerline, up to 82' AGL/311' MSL.
Trees beginning 4677' from DER, 313' right of centerline, up to 89' AGL/303' MSL.
Rwy 16R, trees beginning 119' from DER, 473' right of centerline, up to 32' AGL/221' MSL.
Trees beginning 749' from DER, on centerline, up to 29' AGL/197' MSL.
Trees beginning 745' from DER, 85' right of centerline, up to 33' AGL/212' MSL.
Trees beginning 588' from DER, 536' right of centerline, up to 37' AGL/236' MSL.
Rwy 34L, terrain and sign beginning 1' from DER, 392' right of centerline, up to 5' AGL/192' MSL.
Trees and poles beginning 877' from DER, 616' left of centerline, up to 54' AGL/247' MSL.
Building and trees beginning 1573' from DER, 249' left of centerline, up to 39' AGL/252' MSL.
Trees beginning 1752' from DER, 187' right of centerline, up to 39' AGL/238' MSL.
Tower and trees beginning 2563' from DER, 182' left of centerline, up to 64' AGL/283' MSL.
Trees beginning 2563' from DER, 250' right of centerline, up to 56' AGL/279' MSL.
Rwy 34R, terrain, airfield light, and sign beginning 25' from DER, 92' right of centerline, up to 7' AGL/196' MSL.
Airfield light and vegetation beginning 26' from DER, 78' left of centerline, up to 9' AGL/197' MSL.
Vehicles on road and poles beginning 518' from DER, 595' right of centerline, up to 24' AGL/215' MSL.
Trees beginning 1759' from DER, 448' left of centerline, up to 39' AGL/238' MSL.
Trees 1859' from DER, 828' right of centerline, up to 39' AGL/248' MSL.
Trees beginning 2548' from DER, 828' left of centerline, up to 54' AGL/283' MSL.
Trees beginning 2653' from DER, 1082' right of centerline, up to 57' AGL/280' MSL.

RONALD REAGAN WASHINGTON NTL (DCA)

TAKEOFF MINIMUMS AND (OBSTACLE) DEPARTURE PROCEDURES

AMDT 8B 30JAN20 (21112) (FAA)

TAKEOFF MINIMUMS:

Rwy 1, 600-2 w/min. climb of 275' per NM to 1500 or std. w/min. climb of 460' per NM to 800.
Rwy 4, 300-2 or std. w/min. climb of 210' per NM to 400, or alternatively, with std. takeoff minimums and a normal 200' per NM climb gradient, takeoff must occur no later than 1400' prior to DER.
Rwy 15, 300-1¾ or std. w/min. climb of 215' per NM to 400, or alternatively, with std. takeoff minimums and a normal 200' per NM climb gradient, takeoff must occur no later than 1500' prior to DER.
Rwy 19, 300-1½ or std. w/min. climb of 205' per NM to 300, or alternatively, with std. takeoff minimums and a normal 200' per NM climb gradient, takeoff must occur no later than 1200' prior to DER.
Rwy 22, 500-2¾ or std. w/min. climb of 305' per NM to 600.
Rwy 33, std. w/min. climb of 285' per NM to 700.

DEPARTURE PROCEDURE:

Rwy 1, climbing left turn as soon as practical to intercept DCA VOR/DME R-328. Maintain 5000 or as assigned.
Rwy 4, climbing right turn as soon as practical to intercept DCA VOR/DME R-070. Maintain 2000 or as assigned.
Rwy 15, climb on heading 154° to 5000 or as assigned.
Rwy 19, climb on heading 187° to 500 before turning right. Maintain 5000 or as assigned.
Rwy 22, climb on heading 217° to 3000 or as assigned.
Rwy 33, climb on DCA VOR/DME R-328. Maintain 5000 or as assigned.

TAKEOFF OBSTACLE NOTES:

Rwy 1, building beginning 118' from DER, 331' right of centerline, up to 22' AGL/23' MSL.
Fence 261' from DER, 514' left of centerline, 10' AGL/20' MSL.
Tree and pole beginning 995' from DER, 476' left of centerline, up to 47' AGL/49' MSL.
Trees beginning 1007' from DER, 152' left of centerline, up to 71' AGL/72' MSL.
Tree 1364' from DER, 333' right of centerline, 50' AGL/51' MSL.
Monument 1.6 NM from DER, 1785' right of centerline, 556' AGL/595' MSL.
Rwy 4, microwave sensor and terrain beginning 3' from DER, 334' right of centerline, up to 4' AGL/16' MSL.
Microwave sensor 206' from DER, 260' right of centerline, 7' AGL/18' MSL.
Sign 857' from DER, 681' left of centerline, 83' MSL.
Tower 860' from DER, 677' left of centerline, 72' AGL/84' MSL.
Spire 1.6 NM from DER, 206' right of centerline, 265' MSL.
Rwy 15, lighting beginning 178' from DER, 288' right of centerline, up to 11' AGL/20' MSL.
Tree 1.4 NM from DER, 12' right of centerline, up to 94' AGL/245' MSL.
Tree 1.5 NM from DER, 519' right of centerline, up to 80' AGL/239' MSL.
Rwy 19, pole 395' from DER, 549' right of centerline, 18' AGL/22' MSL.
Tree 3434' from DER, 1134' right of centerline, 105' MSL.
Building 1.1 NM from DER, 1911' right of centerline, 153' AGL/183' MSL.
Building 1.1 NM from DER, 1889' right of centerline, 172' AGL/190' MSL.
Stacks beginning 1.2 NM from DER, 1673' right of centerline, up to 162' AGL/197' MSL.
Building 1.2 NM from DER, 1691' right of centerline, 198' MSL.
Building 1.7 NM from DER, 2444' right of centerline, 272' MSL.

CON'T

22 FEB 2024 to 21 MAR 2024
22 FEB 2024 to 21 MAR 2024

WASHINGTON, DC (CON'T)

RONALD REAGAN WASHINGTON NTL (DCA) (CON'T)

Rwy 22, pole 217' from DER, 478' left of centerline, 15' AGL/23' MSL.
Trees beginning 550' from DER, 498' right of centerline, up to 45' AGL/51' MSL.
Tree 661' from DER, 566' right of centerline, 56' AGL/57' MSL.
Tree 1325' from DER, 586' right of centerline, 59' AGL/61' MSL.
Tree 1351' from DER, 704' right of centerline, 67' AGL/93' MSL.
Tree, building, pole beginning 1411' from DER, 19' right of centerline, up to 82' AGL/110' MSL.
Tree 2899' from DER, 605' left of centerline, 102' MSL.
Building 3336' from DER, 513' right of centerline, 114' AGL/148' MSL.
Building and pole beginning 3440' from DER, 114' right of centerline, up to 118' AGL/153' MSL.
Crane 1.5 NM from DER, 1913' right of centerline, 240' AGL/276' MSL.
Building 2.3 NM from DER, 1067' right of centerline, 336' AGL/440' MSL.
Building 2.3 NM from DER, 1008' right of centerline, 324' AGL/443' MSL.
Rwy 33, sign 18' from DER, 191' left of centerline, 3' AGL/15' MSL.
Fence 27' from DER, 332' right of centerline, 8' AGL/18' MSL.
Pole 93' from DER, 423' right of centerline, 19' AGL/29' MSL.
Tree, vehicles on road beginning 365' from DER, 344' left of centerline, up to 70' MSL.
Pole 580' from DER, 481' right of centerline, 31' AGL/41' MSL.
Trees beginning 699' from DER, 78' right of centerline, up to 56' AGL/60' MSL.
Trees beginning 882' from DER, 349' left of centerline, up to 84' AGL/93' MSL.
Crane, tree, pole beginning 1389' from DER, 289' left of centerline, up to 82' AGL/95' MSL.
Tree 1665' from DER, 236' right of centerline, 62' AGL/62' MSL.
Tree 1691' from DER, 215' right of centerline, 59' AGL/68' MSL.
Tree 1715' from DER, 882' right of centerline, 79' MSL.
Building, pole, antenna beginning 1776' from DER, 247' left of centerline, up to 128' AGL/145' MSL.
Trees beginning 1784' from DER, 934' right of centerline, up to 79' AGL/83' MSL.
Pole 2917' from DER, 524' right of centerline, 102' MSL.
Pole 2925' from DER, 510' right of centerline, 79' AGL/106' MSL.
Antenna beginning 4608' from DER, 277' left of centerline, up to 115' AGL/151' MSL.
Tree 1.5 NM from DER, 3046' left of centerline, 81' AGL/254' MSL.
Pole 1.7 NM from DER, 2115' left of centerline, 101' AGL/308' MSL.
Trees beginning 1.8 NM from DER, 1912' left of centerline, up to 311' MSL.
Building and tower beginning 2.2 NM from DER, 1374' right of centerline, up to 353' AGL/420' MSL.
Building, crane, spire beginning 2.4 NM from DER, 1089' right of centerline, up to 387' AGL/470' MSL.
Building 2.4 NM from DER, 3481' left of centerline, 178' AGL/387' MSL.
Building 2.4 NM from DER, 3585' left of centerline, 185' AGL/392' MSL.
Buildings beginning 2.4 NM from DER, 154' left of centerline, up to 182' AGL/416' MSL.
Building, antenna beginning 2.4 NM from DER, 2457' left of centerline, up to 196' AGL/427' MSL.
NOTE: Prohibited area P-56 1.5 NM north of airport.

WASHINGTON DULLES INTL (IAD)

TAKEOFF MINIMUMS AND (OBSTACLE) DEPARTURE PROCEDURES
AMDT 2 26JUL12 (12208) (FAA)

DEPARTURE PROCEDURE:
Rwy 12, climb heading 121° to 700 before turning left.

TAKEOFF OBSTACLE NOTES:
Rwy 1C, trees 2815' from DER, 1031' left of centerline, up to 80' AGL/345' MSL.
Sign 64' from DER, 303' right of centerline, 13' AGL/272' MSL.
Rwy 1L, tower 1917' from DER, 680' left of centerline, 51' AGL/330' MSL.
Rwy 19C, sign 100' from DER, 472' left of centerline, 4' AGL/289' MSL.
Vehicles on road 24' from DER, 274' right of centerline, up to 15' AGL/293' MSL.
Rwy 30, trees 2264' from DER, 1033' right of centerline, up to 72' AGL/383' MSL.

WAYNESBORO, VA

EAGLE'S NEST (W13)

TAKEOFF MINIMUMS AND (OBSTACLE) DEPARTURE PROCEDURES
ORIG 30JUN11 (11181) (FAA)

TAKEOFF MINIMUMS:
Rwy 6, std. w/min. climb of 400' per NM to 3300, or 2100-3 for climb in visual conditions.
Rwy 24, 300-2 w/min. climb of 400' per NM to 3800 or 2100-3 for climb in visual conditions.

DEPARTURE PROCEDURE:
Rwy 6, climb heading 061° to 3300 before proceeding on course, or for climb in visual conditions: cross Eagle's Nest Airport at or above 3400 MSL before proceeding on course.
Rwy 24, climb heading 241° to 3800 before proceeding on course. Or for climb in visual conditions: cross Eagle's Nest Airport at or above 3400 MSL before proceeding on course.

TAKEOFF OBSTACLE NOTES:
Rwy 6, hangar at DER, 220' left of centerline, 30' AGL/1469' MSL.
Trees beginning 35' from DER, 158' right of centerline, up to 100' AGL/1539' MSL.
Vehicles on road beginning 131' from DER. 201' left of centerline, up to 15' AGL/1454' MSL.
Trees beginning 263' from DER, 189' left of centerline, up to 100' AGL/1539' MSL.
Towers beginning 1.41NM from DER, 2539' right of centerline, 300' AGL/1670' MSL.
Rwy 24, Trees beginning at DER left and right of centerline up to 100' AGL/1579' MSL.
Trees beginning 1259' from DER, 143' right of centerline, up to 100' AGL/1730' MSL.

WEIDE AHP (ABERDEEN PROVING GROUNDS) (KEDG)

EDGEWOOD, MD

TAKEOFF MINIMUMS AND (OBSTACLE) DEPARTURE PROCEDURES

AMDT 1 10AUG23 (23222) (USA)

TAKEOFF MINIMUMS:

Rwys 1, 19, Std. Cross XUHSO at or above 800 for obstacle clearance. Rwy 19 N/A.

DEPARTURE PROCEDURE:

Use JIRET DEPARTURE. Departure visually to the IDF.

TAKEOFF OBSTACLE NOTES:

Rwy 1, bldg 1715' from DER, 954' right of cntrln, 80' AGL/99' MSL.
Pylon 3118' from DER, 934' right of cntrln, 49' AGL/93' MSL.
Pylon 3149' from DER, 799' right of cntrln, 49' AGL/103' MSL.
Pylon 3191' from DER, 652' right of cntrln, 49' AGL/101' MSL.
Pylon 3215' from DER, 556' right of cntrln, 49' AGL/99' MSL.
Pylon 3355' from DER, 568' right of cntrln, 49' AGL/104' MSL.
Pylon 3497' from DER, 566' right of cntrln, 49' AGL/102' MSL.
Terrain 3950' from DER, 1000' right of cntrln, 122' MSL.
Terrain 3990' from DER, 1000' left of cntrln, 129' MSL.

WEST POINT, VA

MIDDLE PENINSULA RGNL (FYJ)

TAKEOFF MINIMUMS AND (OBSTACLE) DEPARTURE PROCEDURES

ORIG 05JUN08 (08157) (FAA)

TAKEOFF OBSTACLE NOTES:

Rwy 10, multiple trees beginning 86' from DER, left and right of centerline, up to 100' AGL/129' MSL.
Rwy 28, multiple trees beginning 33' from DER, left and right of centerline, up to 100' AGL/119' MSL.
Ship mast 3427' from DER, left and right of centerline, 135' AGL/135' MSL.

WESTMINSTER, MD

CARROLL COUNTY RGNL/JACK B POAGE FLD (DMW)

TAKEOFF MINIMUMS AND (OBSTACLE) DEPARTURE PROCEDURES

AMDT 6 05MAR15 (21140) (FAA)

TAKEOFF MINIMUMS:

Rwy 16, 400-2¾ or std. w/min. climb of 255' per NM to 1400.

TAKEOFF OBSTACLE NOTES:

Rwy 16, trees 1995' from DER, 657' left of centerline, up to 59' AGL/838' MSL.
Tower 2.3 NM from DER, 2042' left of centerline, 195' AGL/1144' MSL.
Rwy 34, trees beginning 105' from DER, 423' left of centerline, up to 87' AGL/886' MSL.
Trees beginning 967' from DER, 395' right of centerline, up to 85' AGL/864' MSL.
Terrain and trees beginning 1851' from DER, 123' left of centerline, up to 63' AGL/902' MSL.
Trees beginning 2603' from DER, 470' right of centerline, up to 69' AGL/868' MSL.

CLEARVIEW AIRPARK (2W2)

TAKEOFF MINIMUMS AND (OBSTACLE) DEPARTURE PROCEDURES

ORIG 27AUG09 (09239) (FAA)

TAKEOFF MINIMUMS:

Rwy 32, 300-2¼ or std. w/ min. climb of 290' per NM to 1200.

TAKEOFF OBSTACLE NOTES:

Rwy 14, vehicles and aircraft on road/taxiway 14' from DER, 47' right to left of centerline, 15' AGL/834' MSL.
Trees beginning 35' from DER, 200' left of centerline, up to 100' AGL/939' MSL.
Trees beginning 21' from DER, 90' right of centerline, up to 100' AGL/919' MSL.
Rwy 32, vehicle on road 191' from DER, 516' left of centerline, 15' AGL/774' MSL.
Trees beginning 8' from DER, 24' left of centerline, up to 100' AGL/959' MSL.
Trees beginning 60' from DER, 50' right of centerline, up to 100' AGL/859' MSL.

WILLIAMSBURG, VA

WILLIAMSBURG-JAMESTOWN (JGG)

TAKEOFF MINIMUMS AND (OBSTACLE) DEPARTURE PROCEDURES

AMDT 2 15DEC11 (11349) (FAA)

DEPARTURE PROCEDURE:

Rwy 31, climb heading 311° to 700 before turning right.

TAKEOFF OBSTACLE NOTES:

Rwy 13, boat on creek 468' from DER, 608' left of centerline, up to 35' AGL/35' MSL.
Homes beginning 1399' from DER, 278' left of centerline, up to 25' AGL/94' MSL.
Trees beginning 712' from DER, left and right of centerline, up to 100' AGL/169' MSL.
Rwy 31, aircraft on tarmac 2' from DER, 209' right of centerline, up to 20' AGL/79' MSL.
Hanger 418' from DER, 268' right of centerline, up to 25' AGL/84' MSL.
Multiple buildings and homes beginning 320' from DER, left and right of centerline, up to 30' AGL/109' MSL.
Multiple trees beginning 1' from DER, left and right of centerline, up to 100' AGL/199' MSL.

22 FEB 2024 to 21 MAR 2024
22 FEB 2024 to 21 MAR 2024

WILMINGTON, DE

NEW CASTLE (ILG)

TAKEOFF MINIMUMS AND (OBSTACLE) DEPARTURE PROCEDURES

ORIG 15MAR07 (07074) (FAA)

TAKEOFF MINIMUMS:

Rwy 19, 300-1 or std. w/ min. climb of 266' per NM to 300.

TAKEOFF OBSTACLE NOTES:

Rwy 1, multiple trees beginning 751' from DER, 32' left of centerline, up to 59' AGL/120' MSL.
Tree 1219' from DER, 482' right of centerline, 57' AGL/118' MSL.
Bush 118' from DER, 385' left of centerline, 4' AGL/65' MSL.
Rwy 9, multiple trees beginning 1229' from DER, 30' right of centerline up to 62' AGL/133' MSL.
Tree 975' from DER, 66' left of centerline, 53' AGL/124' MSL.
Light pole 948' from DER, 596' right of centerline, 44' AGL/115' MSL.
Tree 1740' from DER, 458' left of centerline, 83' AGL/134' MSL.
Light pole 945' from DER, 316' right of centerline, 38' AGL/109' MSL.
Rod on building 916' from DER, 457' left of centerline, 29' AGL/100' MSL.
Rwy 14, obstacle light 553' from DER, 440' left of centerline, 29' AGL/103' MSL.
Rod on obstacle light 606' from DER, 615' left of centerline, 19' AGL/93' MSL.
Rwy 19, antenna on obstruction light tower 4469' from DER, 1684' right of centerline, 153' AGL/228' MSL.
Tree 1575' from DER, 850' right of centerline, 45' AGL/120' MSL.
Obstruction light on sign 971' from DER, 448' left of centerline, 28' AGL/103' MSL.
Rwy 27, tree 697' from DER, 533' left of centerline, 68' AGL/147' MSL.
Tree 1110' from DER, 584' right of centerline, 38' AGL/117' MSL.
Pole 793' from DER, 615' right of centerline, 28' AGL/107' MSL.
Bush 408' from DER, 415' left of centerline, 12' AGL/91' MSL.
Rwy 32, tree 711' from DER, 207' right of centerline, 29' AGL/104' MSL.
Tree 1162' from DER, 83' right of centerline, 32' AGL/107' MSL.

WINCHESTER, VA

WINCHESTER RGNL (OKV)

TAKEOFF MINIMUMS AND (OBSTACLE) DEPARTURE PROCEDURES

AMDT 1A 11AUG22 (22223) (FAA)

TAKEOFF MINIMUMS:

Rwy 32, std. w/min. climb of 240' per NM to 1900, or 1300-3 for VCOA.

DEPARTURE PROCEDURE:

Rwy 32, climb on heading 339° to 2500 before turning left.

VCOA:

Rwy 32, obtain ATC approval for climb in visual conditions when requesting IFR clearance. Climb in visual conditions to cross Winchester Rgnl airport at or above 1900 before proceeding on course.

TAKEOFF OBSTACLE NOTES:

Rwy 14, tree 496' from DER, 587' right of centerline, 720' MSL.
Tree 591' from DER, 561' left of centerline, 729' MSL.
Tree 594' from DER, 566' left of centerline, 730' MSL.
Tree 1490' from DER, 652' right of centerline, 739' MSL.
Tree 1491' from DER, 666' right of centerline, 743' MSL.
Tree 1971' from DER, 778' right of centerline, 753' MSL.
Tree 2048' from DER, 882' right of centerline, 761' MSL.
Trees beginning 2059' from DER, 876' right of centerline, up to 765' MSL.
Rwy 32, terrain beginning 2' from DER, 428' left of centerline, up to 729' MSL.
Tree 86' from DER, 508' left of centerline, 762' MSL.
Tree 94' from DER, 474' left of centerline, 763' MSL.
Tree 102' from DER, 478' left of centerline, 764' MSL.
Trees beginning 118' from DER, 209' left of centerline, up to 772' MSL.
Tree 374' from DER, 596' right of centerline, 774' MSL.
Trees beginning 452' from DER, 482' right of centerline, up to 776' MSL.
Tree 1589' from DER, 243' left of centerline, 774' MSL.
Trees beginning 1610' from DER, 248' left of centerline, up to 777' MSL.
Trees beginning 1718' from DER, 269' left of centerline, up to 782' MSL.
Tree 1754' from DER, 291' left of centerline, 786' MSL.
Tree 1760' from DER, 754' left of centerline, 791' MSL.
Trees beginning 1774' from DER, 27' left of centerline, up to 794' MSL.
Trees beginning 1974' from DER, 9' right of centerline, up to 787' MSL.
Trees beginning 2169' from DER, 625' right of centerline, up to 799' MSL.
Trees beginning 2255' from DER, 742' right of centerline, up to 805' MSL.

TAKEOFF MINIMUMS, (OBSTACLE) DEPARTURE PROCEDURES, AND DIVERSE VECTOR AREA (RADAR VECTORS)

23334

WISE, VA

LONESOME PINE (LNP)

TAKEOFF MINIMUMS AND (OBSTACLE) DEPARTURE PROCEDURES

AMDT 3 29JUL10 (10210) (FAA)

DEPARTURE PROCEDURE:

Rwy 6, climb on heading 062° to 3600 before proceeding on course.

Rwy 24, climb on heading 247° to 4900 before proceeding on course.

TAKEOFF OBSTACLE NOTES:

Rwy 6, trees beginning 775' from DER, left and right of centerline, up to 100' AGL/2801' MSL.
Terrain beginning 86' from DER, left and right of centerline, up to 2728' MSL.

Rwy 24, trees beginning 159' from DER, left and right of centerline, up to 100' AGL/2794' MSL.
Obstruction light on LOC 308' from DER 22' left of centerline, 8' AGL/2678' MSL.
Obstruction light on LOC 304' from DER 22' right of centerline, 8' AGL/2678' MSL.
Obstruction light on LOC/DME 306' from DER, 189' right of centerline, 15' AGL/2685' MSL.
Terrain 159' from DER, 363' left of centerline, 2676' MSL.

22 FEB 2024 to 21 MAR 2024

22 FEB 2024 to 21 MAR 2024

TAKEOFF MINIMUMS, (OBSTACLE) DEPARTURE PROCEDURES, AND DIVERSE VECTOR AREA (RADAR VECTORS)

23334